MVG 5-E

Bridge tester for sheath fault location in cables

Benefits:

- **Easy to use**
- **Rugged design**
- **Cost saving solution where a HV supply already exist**

Description

A prelocation of sheath faults in power and telecommunication cables prevents ageing, faults and the stress from faults that are a consequence of water ingress. Here the common TDR methods are not usable, since a conductive return via the earth is not existing. These faults can only be prelocated by using bridge technology. Conventional bridge testers, however, are not suitable since, since a test voltage up to 5 kV DC is required.

The high voltage bridge tester MVG 5-E has an input test voltage capability of up to 5 kV and is fitted with the circuits for bridge balancing. The components available for the HV supply as listed below, and the earth fault locator ESG 80-2 have a dual use, making this combination efficient and extremely cost-effective. The ESG 80-2 is used together with the external HV supply as galvanometer part of the prelocation bridge and with the pulsed HV as step voltage probe for the pinpointing procedure. A protective cover prevents contact with high voltage carrying parts.

The following units can be used to provide the HV supply for the MVG 5-E:

BT 500-IS-1	0 - 2 kV
MMG 5	0 - 5 kV
MMG 10	0 - 10 kV
SPG 5-1000	0 - 5 kV
SPG 32	0 - 5 kV
SPG 40	0 - 10 kV

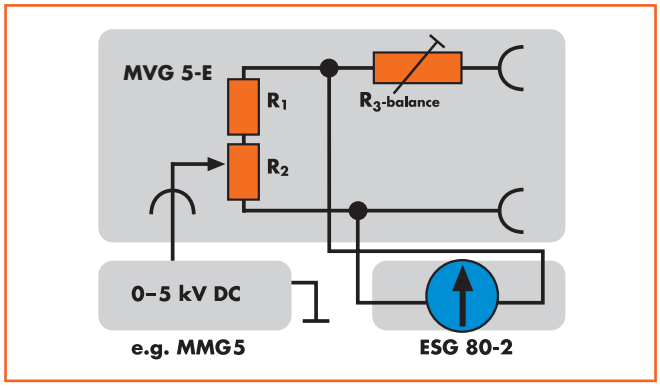

Block diagram of the MVG 5-E with components

Technical Data

Ext. input voltage	0 … 5 kV DC
Indicating instrument	0 … 2 kV or 0 … 6 kV
Scale at 270° control span	0 … 100 %
Compartment	for ESG 80-2
Internal discharge	Max. 5 µF
Pre-location accuracy	< 3 %
Operating temperature	-10 °C … +50 °C
Dimensions (L x B x H)	520 x 255 x 285 mm
Weight (without ESG 80-2)	14.6 kg
Protection type	IP 21

sebaKMT is a registered trademark of the sebaKMT group

CABLE JOINTS, CABLE TERMINATIONS, CABLE GLANDS, CABLE CLEATS
FEEDER PILLARS, FUSE LINKS, ARC FLASH, CABLE ROLLERS, CUT-OUTS

11KV 33KV CABLE JOINTS & CABLE TERMINATIONS
FURSE EARTHING
www.cablejoints.co.uk
Thorne and Derrick UK
Tel 0044 191 490 1547 Fax 0044 191 477 5371
Tel 0044 117 977 4647 Fax 0044 117 9775582

ISO 9001:2000
Technical data subject to change without notice.
LFT_MVG 5-E_eng_2007_10