FUSES

Catalogue

INTRODUCTION

The main function of current limiting fuses is to protect electrical apparatus like distribution transformers, motors, capacitor banks against overload currents. The fuses can operate as sole devices or can be combination with air/SF6 insulated switch disconnector. The choice depends on each application requirements and specific network conditions. One of critical aspects for optimum protection results is proper fuses selection. This can be done based on theoretical calculation but we see many times practical knowledge coming from real test results could make it easier and even more reliable. ABB as the company with wide apparatus product portfolio has long time experience in this field. Our current limiting fuses were designed for safety operations in open air and for limited heat dissipation installation like we find in gas insulated switchgears.

Fuse selection principles for most common situations are presented on the following pages all together with common definitions. Moreover we offer our support for each specific case where presented criteria are not sufficient.

So, before using our products we want to encourage you to read below presented technical definitions and application principles.

MAIN DEFINITIONS

Current limiting back up fuses

Current limiting fuses family is generally composed of three different fuses groups: back-up fuses, general purpose fuses and full range fuses. All of them limit value of prospective short circuits currents during interruption process extending life time of nearby installed electrical equipment. The main difference is in minimum breaking current that characterize lowest fault current that fuses are capable to interrupt. This value is regularly highest for back up fuses, slightly smaller for general purpose and smallest with the value nearby minimum melting current for full range fuses. But for the protection function reaction time is critical. That is why back up fuses having interruption time for their minimum breaking current in the range of few seconds up to few tens of milliseconds are the most common in use. The total clearing time in case of high value of short circuits currents is even shorter i.e. few ms only. That is why back up fuses can be used as typical overload protection element. Whereas general purpose and full range fuses even capable to interrupt smallest values of currents can be considered as over current devices only since the interruption time is 1 hour and more. ABB current limiting fuses have minimum breaking currents at very low level nearby 3xIn.

M-effect

One of the structural means used for forming the time-current characteristic of medium voltage fuse links of CEF and CMF series, manufactured by ABB, is an overload spot located on fuse elements. To create this overload spot the M-effect is used. The overload spot is made by coating the silver fuse elements with a short segment of metal characterized by a low melting point. For the first time the M-effect was described by professor Metcalf in the 1930s. It consists in taking advantage of the effect of melting by some metals characterized by a low melting point (e.g. tin, lead) and being in a liquid state, metals characterized by a higher melting point (e.g. copper, silver). Silver fuse element coated with a segment of metal a low melting point metal (solder) fuses for current values that would not fuse it if the overload spot were not present. The reason for it is as follows: During heating of the fuse element with the overload spot, the metal, which the overload spot is made of, starts melting and diffuses into the metal of the fuse element and thus reduces the active cross-section of the main silver fuse element. As a result of this silver fuse element is melted at the moment when the other parts of the fuse element still keep a relatively low temperature. With this design the overload spot enables reduction of the minimum melting current and reduction of the minimum breaking current. Consequently, the range of correct operation of the fuse link is extended. One must also emphasize that in case of short-circuit currents, when fuse elements are heating up very fast and practically no heat is dissipated into the surrounding arc-quenching medium (adiabatic heating), the fuse elements melt at the constrictions before metal, which the overload spot is made of, reaches its melting temperature. Therefore, the overload spot does not affect the fuses characteristic for short-circuit currents. Additionally, a very important advantage of using the overload spot is the fact that the arc is always initiated at the same point on the fuse element, near the geometrical center of the fuse link. This solution prevents the arc from initializing near one of the end-caps, which could result in damaging of the end-cap by the arc. To sum up, the overload spot enables increase in the useful operational range of the fuse link by extending the range of correct operation for small overload currents. Moreover, use of the overload spot prevents the arc from initializing near one of the fuse link ends and, thus, makes the fuse link safer to use.

Fuse-switch combination

Back up fuses are commonly used for fuse-switch combinations both in open air and in gas insulated panels. When fuses operates as protective device incorporated with switch by tripping system we need to consider two different function of fuses depending on interrupted current value. When fault current is above transfer current, fuses simply extend breaking capability of switch disconnector completing interruption operation always faster than incorporated switch. This happens for fuse clearing time is shorter than total opening time of LBS. When striker pin pops up fuses have already cleared current and switch opens in almost no load conditions. Other situation is when fault currents are below nominal transfer current. The main role of fuses is to activate tripping system of switch by striker pin. In this case interruption process is completed by

switch first preventing fuses from overload in case of low fault current. Fuses that are to be used for fuse-switch combination have to fulfill conditions presented in IEC 62271-105 (former IEC 60420 and IEC 420). Back up fuses are specially designed for such an application. Use of general purpose or full range fuses for fuse switch combination is not reasonable due to coordination principles.

GENERAL PRINCIPLES FOR FUSE LINKS SELECTION

Choice of rated current In

To obtain the best possible current limitation, and thereby also protection, In must be chosen as low as possible compared to the rated current of the object to be protected. However, the following limitations must be taken into consideration:

– the largest load current must not exceed In;
– cooling conditions (e.g. in compact switchgear);
– inrush current of off load transformers;
– starting currents of motor circuits. (See Chapter CMF, special motor fuses).

Protection of capacitor banks

HRC fuses are normally connected in series with capacitor unit or banks and they are to isolate when units become faulty under normal operating voltages including transient voltage during energizing of capacitors. That is why the chosen fuse links' rated voltage should be not less than 1,1 of rated voltage of capacitor unit and rated current of the fuse should be at least 1,43 of capacitor rated current as it recommended in IEC 60549. In practice we can distinguish two general cases;

Only one capacitor bank connected

Select rated current In for fuses at least 2 times of rated current Inc of capacitor bank and rated voltage Un higher than Unc.

$In \geq 2xInc$

$Un \geq 2xUnc$

Example

315 kVAr capacitor bank with 10 kV Unc.

$$Inc = \frac{315}{10 \times \sqrt{3}} = 18{,}2 \text{ A}$$

Selected fuses: In = 40 A; Un = 24 kV

More than one capacitor connected in parallel

Including possibility of reloading i.e. transmitting from load capacitor bank to unloaded it must be considered that very high transient current may occur.

Select In of fuses to be more than 3 times of Inc for capacitor banks. And due to wide variations of transient currents may occur it is recommended to consult calculation with supplier of capacitors.

Application in SF6 switchgears

CEF fuses were designed in relation to application inside gas insulated switchgears. The coordination of fuses with switch disconnector when limited heat dissipation conditions occur is not easy task. This is part of knowledge obtained mainly from many practical tests performed in different loading conditions.

First we should define maximum allowed value of power losses for fuses not to exceed temperature rise limits according to referred standard. This results in de-rating of rated current of fuses having power losses above this limit to safety level with clear assumption of fuse load factor. All this procedure should be verified by temperature rise and breaking tests and this is ABB standard approach for SF6 switchgear and CEF fuses.

For detailed information regarding choice of ABB fuses for transformer protection in SF6 switchgear please refer to switchgear catalogue data.

Replacement of melted fuse links

HRC fuse links cannot be regenerated. According to IEC Publication 60282 1 (IEC 282-1), all 3 fuse links should be replaced, even if only one of them in three phase system have operated. Exceptions are allowed when it can be verified that the fuse link(s) have not experienced any over current.

INDICATOR AND STRIKER PIN

CEF and CMF fuses are equipped with combined indicator- and striker system, which is activated immediately when the fuse element melts. CEF-VT is available with and without striker pin – please refer to ordering tables. The force diagram is in accordance with the requirements of IEC 60282-1 (IEC 282-1) and DIN 43625.

The bellow presented striker pin force diagram is valid for CEF/CMF fuses as effective from May 2006. The former version of striker pin was with initial force of 50N.

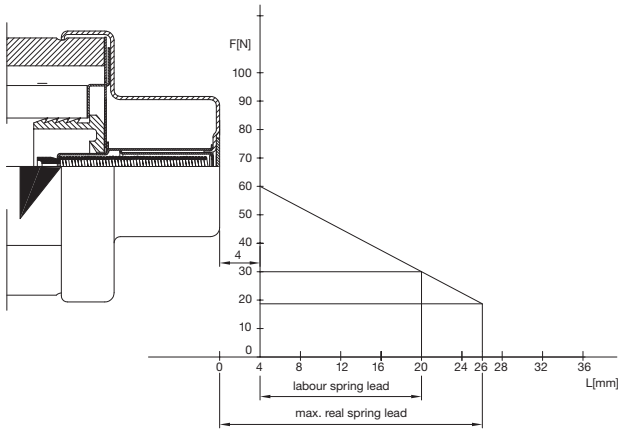

NAMEPLATE

The symbols on the nameplate have the following meaning:
I_N = Rated current
U_N = Rated voltage
I_3 = Minimum breaking current
I_1 = Maximum short circuit current for which the fuse is tested
The arrowhead on the nameplate indicates in which end of the fuse link the indicator and striker pin appears. Additionally this end contact of the fuse link is specially marked.
CEF-U is outdoor type.

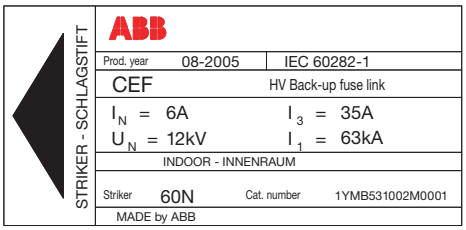

The above nameplate is example one for ABB CEF fuses and the information presented there could be different for specific fuse type.

All CEF and CMF fuses ere marked with EAN 13 codes (on their cartoon boxes) that are specified in ordering tables right to catalogue numbers. The example of this name plate is presented below.

CURRENT LIMITATION

All presented ABB fuse links are current limiting ones. A large short circuit current will therefore not reach its full value. The cut-off characteristics shows the relation between the prospective short circuit current and the peak value of the cut-off current. Substantial current limitation results in a considerable reduction of the thermal and mechanical stress on the high voltage installation.

Index

High voltage current limiting

fuse links type CEF

Rated voltage: 3,6/7,2-36 kV
Rated current: 6-200 A

1. GENERAL

The HRC generation of fuse link type CEF are designed and tested according to IEC Publication 60282-1 (IEC 282-1). Dimensionally the fuse links are in accordance with DIN 43625.

ABB's high voltage fuse links have the following properties:

– Low minimum breaking current
– Low power losses
– Low arc-voltage
– High breaking capacity up to 63 kA
– High current limitation.

Low power losses permit installation of these fuse links in compact switchgear.

CEF fuses are of back-up type. They have a zone between the minimum melting current and the minimum breaking current where the fuse links may fail to interrupt.

For CEF fuse links this zone is very narrow. The minimum breaking current I_3 for any type is specified in the table on p. 13 and 14.

2. OVERVOLTAGES

In order to be current limiting, the fuse link must generate an arc-voltage exceeding the instantaneous value of the operating voltage. The switching voltage generated by the CEF fuse link is below the maximum permissible value acc. to IEC 60282-1 (IEC 282-1). The CEF fuse link can safely be used if the system line voltage is 50-100% of the rated fuse link voltage.

3. PRE-ARCING TIMES AND CUT-OFF CHARACTERISTICS

The characteristics are equal for all rated voltages and are recorded from cold condition.

Dashed sections of the curves indicate the zone of uncertain interruption.

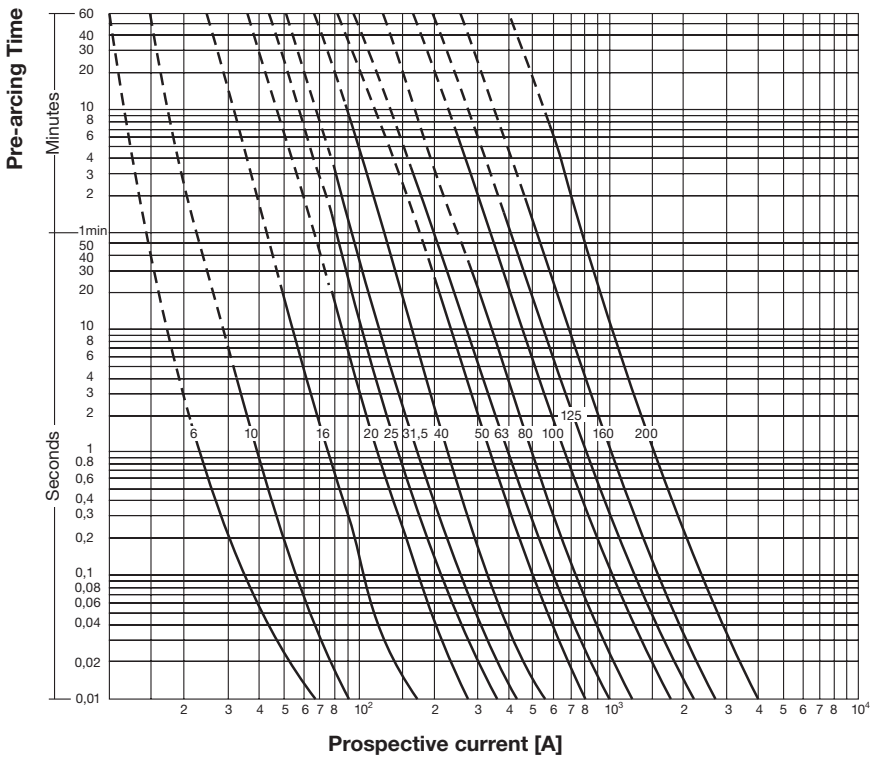

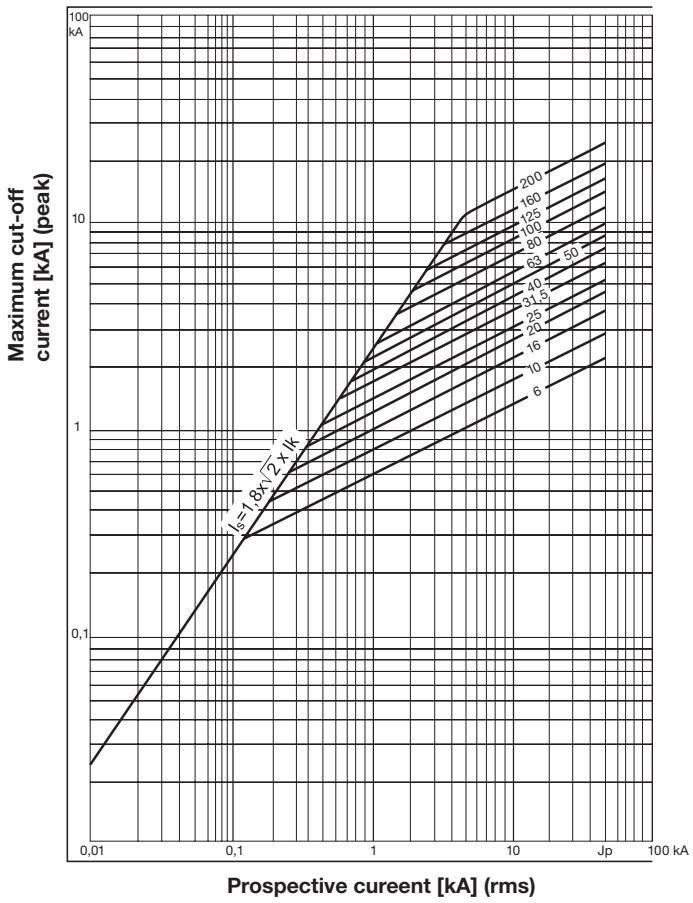

4. CHOICE OF FUSE LINKS

Choice of rated current I_N

For the choice of rated current of fuse links for protection of transformers, the relation between the power rating of the transformers, operating voltage and rated current of the fuse link is given in the table below. The same table indicates the highest rated current of the low voltage fuse link (on the low voltage side of the transformer) which gives discrimination with the high voltage fuse link. The low voltage fuse link is of the type gL (VDE) or gG/ gM(IEC).

For choice of fuse links for transformer protection in switchgear of type Safe Plus or Safering CTC-F, see SF Insulated Compact Switchgear and Ring Main Unit catalogue.

High voltage current limiting

fuse links type CEF

Choice of fuse links for protection of transformers

Line voltage [kV]	TRANSFORMER RATING (kVA)																			
	25	50	75	100	125	160	200	250	315	400	500	630	800	1000	1250	1600	2000	2500	3000	3500
	HIGH VOLTAGE FUSE-LINK I_n (A)																			
3	16	25	25	40	40	63	63	63	80	100	100	160	200	200	250*	315*				
5	10	16	25	25	25	40	40	63	63	63	80	100	100	160	200	200	250*	315*	315*	
6	10	16	16	25	25	25	40	40	63	63	63	80	100	100	160	200	200	250*	315	315*
10	6	10	16	16	16	25	25	25	31,5	40	63	63	63	80	100	100	160	200	250*	250*
12	6	10	16	16	16	16	25	25	25	31,5	40	63	63	63	80	100	160	160	200	250*
15	6	10	10	16	16	16	16	20	25	25	31,5	40	63	63	63	100	100	125	200	200
20	6	10	10	10	16	16	16	20	20	20	31,5	31,5	40	63	63	63	80	100	125	160
24	6	10	10	10	10	16	16	20	20	20	31,5	31,5	40	40	63	63	63	80	125	125
30	6	10	10	10	10	10	16	16	16	16	25	25	25	40	40	40	2x40	2x40		
36	6	10	10	10	10	10	10	16	16	16	16	25	25	25	40	40	2x40	2x40		
Low voltage	LOW VOLTAGE FUSE-LINK I_n (A)																			
220 V		80	100	125	160	200	250	250	315	400	500	630								
380 V		50	63	100	100	125	125	200	250	250	350	400	400	500	630					
500 V		40	50	80	80	100	100	160	160	200	250	350	350	400	500	630				

*) CMF -fuse link

Presented values were calculated for free air conditions and 120% overload factor for protected transformers. If other conditions apply given vales should be recalculated considering real situation.

5. ORDERING TABLE

High-voltage – HRC fuse links

Type	Rated voltage Un [kV]	Rated current [A]	Length e [mm]	Diameter D [mm]	Catalogue No.	EAN13 Codes	Weight [kg]
CEF	3,6/7,2	6	192	65	1YMB531001M0001	5901436020011	1,5
CEF	3,6/7,2	10	192	65	1YMB531001M0002	5901436020028	1,5
CEF	3,6/7,2	16	192	65	1YMB531001M0003	5901436020035	1,5
CEF	3,6/7,2	25	192	65	1YMB531001M0004	5901436020042	1,5
CEF	3,6/7,2	40	192	65	1YMB531001M0005	5901436020059	1,5
CEF	3,6/7,2	50	192	65	1YMB531001M0006	5901436020066	1,5
CEF	3,6/7,2	63	192	65	1YMB531001M0007	5901436020073	1,5
CEF	3,6/7,2	80	192	87	1YMB531001M0008	5901436020080	2,6
CEF	3,6/7,2	100	192	87	1YMB531001M0009	5901436020097	2,6
CEF	3,6/7,2	6	292	65	1YMB531034M0001	5901436023692	2,3
CEF	3,6/7,2	10	292	65	1YMB531034M0002	5901436023708	2,3
CEF	3,6/7,2	16	292	65	1YMB531034M0003	5901436023715	2,3
CEF	3,6/7,2	25	292	65	1YMB531034M0004	5901436023722	2,3
CEF	3,6/7,2	40	292	65	1YMB531034M0005	5901436023739	2,3
CEF	3,6/7,2	50	292	65	1YMB531034M0006	5901436023746	2,3
CEF	3,6/7,2	63	292	65	1YMB531034M0007	5901436023753	2,3
CEF	3,6/7,2	80	292	87	1YMB531034M0008	5901436023760	3,6
CEF	3,6/7,2	100	292	87	1YMB531034M0009	5901436023777	3,6
CEF	3,6/7,2	125	292	87	1YMB531001M0010	5901436020103	3,6
CEF	3,6/7,2	160	292	87	1YMB531001M0011	5901436020110	3,6
CEF	3,6/7,2	200	292	87	1YMB531001M0012	5901436020127	3,6
CEF	3,6/7,2	125	367	87	1YMB531034M1010	5901436023807	4,4
CEF	3,6/7,2	160	367	87	1YMB531034M0011	5901436023784	4,4
CEF	3,6/7,2	200	367	87	1YMB531034M0012	5901436023791	4,4
CEF	12	6	292	53	1YMB531042M0001	5901436024231	1,9
CEF	12	6	292	65	1YMB531002M0001	5901436020134	2,3
CEF	12	10	292	53	1YMB531042M0002	5901436024248	1,9
CEF	12	10	292	65	1YMB531002M0002	5901436020141	2,3
CEF	12	16	292	53	1YMB531042M0003	5901436024255	1,9
CEF	12	16	292	65	1YMB531002M0003	5901436020158	2,3
CEF	12	20	292	53	1YMB531042M0004	5901436024262	1,9
CEF	12	25	292	65	1YMB531002M0004	5901436020165	2,3
CEF	12	31,5	292	65	1YMB531002M0014	5901436020257	2,3
CEF	12	40	292	65	1YMB531002M0005	5901436020172	2,3
CEF	12	50	292	65	1YMB531002M0006	5901436020189	2,3
CEF	12	63	292	65	1YMB531002M0007	5901436020196	2,3
CEF	12	80	292	65	1YMB531002M0021	5901436020264	2,3
CEF	12	80	292	87	1YMB531002M0008	5901436020202	3,6
CEF	12	100	292	65	1YMB531002M0022	5901436020271	2,3
CEF	12	100	292	87	1YMB531002M0009	5901436020219	3,6
CEF	12	125	292	87	1YMB531043M0010	5901436024453	3,6
CEF	12	6	442	53	1YMB531047M0001	5901436024330	2,5
CEF	12	6	442	65	1YMB531035M0001	5901436023814	3,0
CEF	12	10	442	53	1YMB531047M0002	5901436024347	2,5
CEF	12	10	442	65	1YMB531035M0002	5901436023821	3,0
CEF	12	16	442	53	1YMB531047M0003	5901436024354	2,5
CEF	12	16	442	65	1YMB531035M0003	5901436023838	3,0
CEF	12	20	442	53	1YMB531047M0004	5901436024361	2,5
CEF	12	25	442	65	1YMB531035M0004	5901436023845	3,0
CEF	12	31,5	442	65	1YMB531035M0014	5901436023937	3,0
CEF	12	40	442	65	1YMB531035M0005	5901436023852	3,0
CEF	12	50	442	65	1YMB531035M0006	5901436023869	3,0
CEF	12	63	442	65	1YMB531035M0007	5901436023876	3,0
CEF	12	80	442	65	1YMB531035M0021	5901436023944	3,0
CEF	12	80	442	87	1YMB531035M0008	5901436023883	5,3
CEF	12	100	442	65	1YMB531035M0022	5901436023951	3,0
CEF	12	100	442	87	1YMB531035M0009	5901436023890	5,3
CEF	12	125	442	65	1YMB531002M0023	5901436020288	3,0
CEF	12	125	442	87	1YMB531002M0010	5901436020226	5,3
CEF	12	160	442	87	1YMB531002M0011	5901436020223	5,3
CEF	12	200	442	87	1YMB531002M0012	5901436020240	5,3
CEF	12	125	537	65	1YMB531035M0023	5901436023968	4,0
CEF	12	125	537	87	1YMB531035M0010	5901436023906	6,2
CEF	12	160	537	87	1YMB531035M0011	5901436023913	6,2
CEF	12	200	537	87	1YMB531035M0012	5901436023920	6,2
CEF	17,5	6	292	65	1YMB531003M0001	5901436020295	2,3
CEF	17,5	10	292	65	1YMB531003M0002	5901436020301	2,3
CEF	17,5	16	292	65	1YMB531003M0003	5901436020318	2,3
CEF	17,5	20	292	65	1YMB531003M0013	5901436020394	2,3
CEF	17,5	25	292	65	1YMB531003M0004	5901436020325	2,3
CEF	17,5	31,5	292	65	1YMB531003M0014	5901436020400	2,3
CEF	17,5	40	292	65	1YMB531003M0021	5901436020417	2,3
CEF	17,5	40	292	87	1YMB531003M0005	5901436020332	3,6
CEF	17,5	50	292	65	1YMB531003M0022	5901436020424	2,3
CEF	17,5	50	292	87	1YMB531003M0006	5901436020349	3,6
CEF	17,5	63	292	87	1YMB531003M0007	5901436020356	3,6

High voltage current limiting

fuse links type CEF

Type	Rated voltage Un [kV]	Rated current [A]	Length e [mm]	Diameter D [mm]	Catalogue No.	EAN13 Codes	Weight [kg]
CEF	17,5	6	367	65	1YMB531036M0001	5901436023975	2,7
CEF	17,5	10	367	65	1YMB531036M0002	5901436023982	2,7
CEF	17,5	16	367	65	1YMB531036M0003	5901436023999	2,7
CEF	17,5	20	367	65	1YMB531036M0013	5901436024040	2,7
CEF	17,5	25	367	65	1YMB531036M0004	5901436024002	2,7
CEF	17,5	31,5	367	65	1YMB531036M0014	5901436024057	2,7
CEF	17,5	40	367	65	1YMB531036M0021	5901436024064	2,7
CEF	17,5	40	367	87	1YMB531036M0005	5901436024019	4,4
CEF	17,5	50	367	65	1YMB531036M0022	5901436024071	2,7
CEF	17,5	50	367	87	1YMB531036M0006	5901436024026	4,4
CEF	17,5	63	367	87	1YMB531036M0007	5901436024033	4,4
CEF	17,5	100	367	87	1YMB531038M0001	5901436024224	4,4
CEF	17,5	6	442	65	1YMB531037M0001	5901436024088	3,0
CEF	17,5	10	442	65	1YMB531037M0002	5901436024095	3,0
CEF	17,5	16	442	65	1YMB531037M0003	5901436024101	3,0
CEF	17,5	20	442	65	1YMB531037M0013	5901436024187	3,0
CEF	17,5	25	442	65	1YMB531037M0004	5901436024118	3,0
CEF	17,5	31,5	442	65	1YMB531037M0014	5901436024194	3,0
CEF	17,5	40	442	65	1YMB531037M0021	5901436024200	3,0
CEF	17,5	40	442	87	1YMB531037M0005	5901436024125	5,3
CEF	17,5	50	442	65	1YMB531037M0022	5901436024217	3,0
CEF	17,5	50	442	87	1YMB531037M0006	5901436024132	5,3
CEF	17,5	63	442	87	1YMB531037M0007	5901436024149	5,3
CEF	17,5	80	442	87	1YMB531003M0008	5901436020363	5,3
CEF	17,5	100	442	87	1YMB531003M0009	5901436020370	5,3
CEF	17,5	125	442	87	1YMB531003M0010	5901436020387	5,3
CEF	17,5	80	537	87	1YMB531037M0008	5901436024156	6,2
CEF	17,5	100	537	87	1YMB531037M0009	5901436024163	6,2
CEF	17,5	125	537	87	1YMB531037M0010	5901436024170	6,2
CEF	24	6	442	53	1YMB531044M0001	5901436024279	2,5
CEF	24	6	442	65	1YMB531004M0001	5901436020431	3,0
CEF	24	10	442	53	1YMB531044M0002	5901436024286	2,5
CEF	24	10	442	65	1YMB531004M0002	5901436020448	3,0
CEF	24	16	442	53	1YMB531044M0003	5901436024293	2,5
CEF	24	16	442	65	1YMB531004M0003	5901436020455	3,0
CEF	24	20	442	53	1YMB531044M0004	5901436024309	2,5
CEF	24	20	442	65	1YMB531004M0011	5901436020530	3,0
CEF	24	25	442	65	1YMB531004M0004	5901436020462	3,0
CEF	24	31,5	442	65	1YMB531004M0012	5901436020547	3,0
CEF	24	40	442	65	1YMB531004M0005	5901436020479	3,0
CEF	24	50	442	65	1YMB531004M0021	5901436020554	3,0
CEF	24	50	442	87	1YMB531004M0006	5901436020486	5,3
CEF	24	63	442	65	1YMB531004M0022	5901436020561	3,0
CEF	24	63	442	87	1YMB531004M0007	5901436020493	5,3
CEF	24	80	442	87	1YMB531022M0001	5901436022688	5,3
CEF	24	100	442	87	1YMB531022M0002	5901436022695	5,3
CEF	24	125	442	87	1YMB531022M0003	5901436022701	5,3
CEF	24	80	537	65	1YMB531004M0023	5901436020578	4,0
CEF	24	80	537	87	1YMB531004M0008	5901436020509	6,2
CEF	24	100	537	87	1YMB531004M0009	5901436020516	6,2
CEF	24	125	537	87	1YMB531004M0010	5901436020523	6,2
CEF	27	6	442	65	1YMB531005M0001	5901436020585	3,0
CEF	27	10	442	65	1YMB531005M0002	5901436020592	3,0
CEF	27	16	442	65	1YMB531005M0003	5901436020608	3,0
CEF	27	25	442	87	1YMB531005M0004	5901436020615	5,3
CEF	27	40	442	87	1YMB531005M0005	5901436020622	5,3
CEF	27	50	442	87	1YMB531005M0006	5901436020639	5,3
CEF	27	63	442	87	1YMB531005M0007	5901436020646	5,3
CEF	27	80	537	87	1YMB531005M0008	5901436020653	6,2
CEF	27	100	537	87	1YMB531005M0009	5901436020660	6,2
CEF	36	6	537	65	1YMB531006M0001	5901436020677	4,0
CEF	36	10	537	65	1YMB531006M0002	5901436020684	4,0
CEF	36	16	537	65	1YMB531006M0003	5901436020691	4,0
CEF	36	25	537	87	1YMB531006M0004	5901436020707	6,2
CEF	36	40	537	87	1YMB531006M0005	5901436020714	6,2

Other ratings and dimensions on request. When ordering outdoor version pls. indicate CEF –U.

6. DATA AND DIMENSIONS CEF

Type	Rated voltage U_n [kV]	Rated current I_n[kV]	Length e [mm]	Diameter D [mm]	Short Circuit current I_1 [kA]	Minimum breaking current I_3 [A]	Rated Power P_n [W]	Resistance R_O [mh]
CEF	3,6/7/2	6	192	65	50	35	26	489,0
CEF	3,6/7/2	10	192	65	50	55	16	120,3
CEF	3,6/7/2	16	192	65	50	55	26	60,2
CEF	3,6/7/2	25	192	65	50	72	24	30,1
CEF	3,6/7/2	40	192	65	50	100	30	15,3
CEF	3,6/7/2	50	192	65	50	190	35	10,4
CEF	3,6/7/2	63	192	65	50	190	40	7,8
CEF	3,6/7/2	80	192	87	50	250	52	6,2
CEF	3,6/7/2	100	192	87	50	275	57	4,4
CEF	3,6/7/2	6	292	65	50	35	26	489,0
CEF	3,6/7/2	10	292	65	50	55	16	120,3
CEF	3,6/7/2	16	292	65	50	55	26	60,2
CEF	3,6/7/2	25	292	65	50	72	24	30,1
CEF	3,6/7/2	40	292	65	50	100	30	15,3
CEF	3,6/7/2	50	292	65	50	190	35	10,4
CEF	3,6/7/2	63	292	65	50	190	40	7,8
CEF	3,6/7/2	80	292	87	50	250	52	6,2
CEF	3,6/7/2	100	292	87	50	275	57	4,4
CEF	3,6/7/2	125	292	87	50	375	76	3,5
CEF	3,6/7/2	160	292	87	50	480	101	2,6
CEF	3,6/7/2	200	292	87	50	650	107	1,7
CEF	3,6/7/2	125	367	87	50	375	76	3,5
CEF	3,6/7/2	160	367	87	50	480	101	2,6
CEF	3,6/7/2	200	367	87	50	650	107	1,7
CEF	12	6	292	53	63	36	46	735,0
CEF	12	6	292	65	63	35	41	735,0
CEF	12	10	292	53	63	65	25	180,5
CEF	12	10	292	65	63	55	33	180,5
CEF	12	16	292	53	63	65	34	105,2
CEF	12	16	292	65	63	55	32	105,2
CEF	12	20	292	53	63	83	38	70,1
CEF	12	25	292	65	63	77	47	52,6
CEF	12	31,5	292	65	63	100	41	30,7
CEF	12	40	292	65	63	105	52	23,0
CEF	12	50	292	65	63	190	70	17,9
CEF	12	63	292	65	63	190	78	13,4
CEF	12	80	292	65	63	250	82	9,2
CEF	12	80	292	87	63	250	82	9,2
CEF	12	100	292	65	63	375	101	6,4
CEF	12	100	292	87	63	275	84	6,6
CEF	12	125	292	87	63	375	125	5,1
CEF	12	6	442	53	63	36	46	735,0
CEF	12	6	442	65	63	35	41	735,0
CEF	12	10	442	53	63	65	25	180,5
CEF	12	10	442	65	63	55	33	180,5
CEF	12	16	442	53	63	65	34	105,2
CEF	12	16	442	65	63	55	32	105,2
CEF	12	20	442	53	63	83	38	70,1
CEF	12	25	442	65	63	77	47	52,6
CEF	12	31,5	442	65	63	100	41	30,7
CEF	12	40	442	65	63	105	52	23,0
CEF	12	50	442	65	63	190	70	17,9
CEF	12	63	442	65	63	190	78	13,4
CEF	12	80	442	65	63	250	82	9,2
CEF	12	80	442	87	63	250	82	9,2
CEF	12	100	442	65	63	375	103	6,4
CEF	12	100	442	87	63	275	84	6,6
CEF	12	125	442	65	63	375	125	5,3
CEF	12	125	442	87	63	375	125	5,3
CEF	12	160	442	87	63	480	170	3,9
CEF	12	200	442	87	50	650	174	2,7
CEF	12	125	537	65	50	375	125	5,3
CEF	12	125	537	87	50	375	125	5,3
CEF	12	160	537	87	50	480	170	3,9
CEF	12	200	537	87	50	650	174	2,7
CEF	17,5	6	292	65	20	35	54	880,0
CEF	17,5	10	292	65	20	55	41	270,7
CEF	17,5	16	292	65	20	55	67	135,4
CEF	17,5	20	292	65	25	83	52,6	90,3
CEF	17,5	25	292	65	25	72	64	67,7
CEF	17,5	31,5	292	65	25	100	56,7	46,0
CEF	17,5	40	292	65	25	210	80	34,5
CEF	17,5	40	292	87	25	100	80	34,5
CEF	17,5	50	292	65	25	210	90	23,1
CEF	17,5	50	292	87	25	210	90	23,1
CEF	17,5	63	292	87	25	210	100	17,3
CEF	17,5	6	367	65	20	35	54	880,0
CEF	17,5	10	367	65	20	55	41	270,7
CEF	17,5	16	367	65	20	55	67	135,4

High voltage current limiting

fuse links type CEF

Type	Rated voltage U_n [kV]	Rated current I_n [kV]	Length e [mm]	Diameter D [mm]	Short Circuit current I_1 [kA]	Minimum breaking current I_3 [kA]	Rated Power P_n [W]	Resistance R_o [mq]
CEF	17,5	20	367	65	25	83	52,6	90,3
CEF	17,5	25	367	65	25	72	64	67,7
CEF	17,5	31,5	367	65	25	100	56,7	46,0
CEF	17,5	40	367	65	25	210	80	34,5
CEF	17,5	40	367	87	25	100	80	34,5
CEF	17,5	50	367	65	25	210	90	23,1
CEF	17,5	50	367	87	25	210	90	23,1
CEF	17,5	63	367	87	25	210	100	17,3
CEF	17,5	100	367	87	25	375	134	9,5
CEF	17,5	6	442	65	20	35	54	880,0
CEF	17,5	10	442	65	20	55	41	270,7
CEF	17,5	16	442	65	20	55	67	135,4
CEF	17,5	20	442	65	25	83	52,6	90,3
CEF	17,5	25	442	65	25	72	64	67,7
CEF	17,5	31,5	442	65	25	100	56,7	46,0
CEF	17,5	40	442	65	25	210	80	34,5
CEF	17,5	40	442	87	25	100	80	34,5
CEF	17,5	50	442	65	25	210	90	23,1
CEF	17,5	50	442	87	25	210	90	23,1
CEF	17,5	63	442	87	25	210	100	17,3
CEF	17,5	80	442	87	25	250	124	13,8
CEF	17,5	100	442	87	25	275	136	9,9
CEF	17,5	125	442	87	25	375	175	7,9
CEF	17,5	80	537	87	25	250	124	13,8
CEF	17,5	100	537	87	25	275	136	9,9
CEF	17,5	125	537	87	25	375	175	7,9
CEF	24	6	442	53	63	25	82	1370,0
CEF	24	6	442	65	63	35	91	1370,0
CEF	24	10	442	53	63	65	48	360,9
CEF	24	10	442	65	63	55	62	360,9
CEF	24	16	442	53	63	65	63	180,5
CEF	24	16	442	65	63	55	72	180,5
CEF	24	20	442	53	63	83	46	120,3
CEF	24	20	442	65	63	82	61	120,3
CEF	24	25	442	65	63	72	79	90,2
CEF	24	31,5	442	65	63	82	98	72,2
CEF	24	40	442	65	63	110	106	46,0
CEF	24	50	442	65	63	210	130	30,7
CEF	24	50	442	87	63	210	130	30,7
CEF	24	63	442	65	63	250	147	23,0
CEF	24	63	442	87	63	210	147	23,0
CEF	24	80	442	87	63	250	165	18,4
CEF	24	100	442	87	63	300	186	15,4
CEF	24	125	442	87	63	375	234	10,5
CEF	24	80	537	65	63	250	165	18,4
CEF	24	80	537	87	63	250	165	18,4
CEF	24	100	537	87	63	300	186	13,2
CEF	24	125	537	87	63	375	234	10,5
CEF	27	6	442	65	20	35	91	1340,0
CEF	27	10	442	65	20	55	80	451,2
CEF	27	16	442	65	20	55	90	225,6
CEF	27	25	442	87	20	72	100	112,8
CEF	27	40	442	87	20	110	130	55,6
CEF	27	50	442	87	20	210	130	30,7
CEF	27	63	442	87	20	210	147	23,0
CEF	27	80	537	87	20	250	210	18,4
CEF	27	100	537	87	20	300	235	15,8
CEF	36	6	537	65	20	35	137	2055,0
CEF	36	10	537	65	20	55	93	571,5
CEF	36	16	537	65	20	55	109	285,8
CEF	36	25	537	87	20	72	144	142,9
CEF	36	40	537	87	20	100	176	69,1

I_1 = maximum short-circuit current tested
I_3 = minimum breaking current
P_N = power loss at rated current
R_o = resistance at room temp.

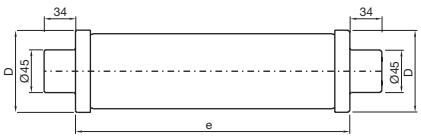

7. ACCESSORIES
Fuse base type UCE

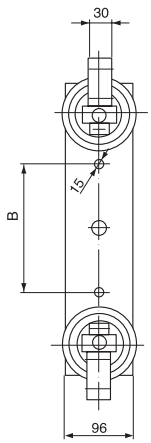

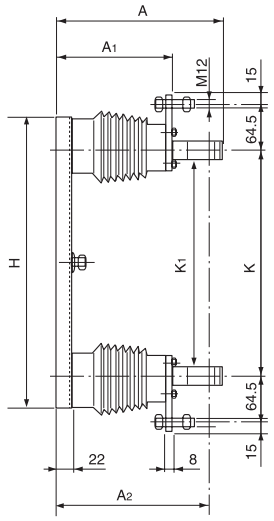

Fuse clips

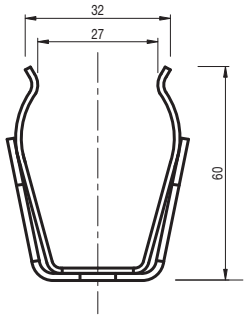

Catalogue No. 1YMX000128M0001

8. ORDERING TABLE

Type	Rated voltage	Current ratings	Fuse length	Dimensions in mm							Weight	Catalogue No.
	kV	A	mm	A	A1	A2	H	K	K1	B	kg	
UCE 7,2	3,6/7,2	6-100	192	242	160	221	310	218	193	55	3,4	1YMX052501M0001
UCE12	3,6/7,2 12	6-200 6-125	292	242	160	221	410	318	293	180	3,7	1YMX052503M0001 1YMX052503M0001
UCE 12L	12	125-200	442	242	160	221	570	468	443	300	4,2	1YMX052505M0001
UCE 17,5	17,5	6-63	292	327	245	306	410	318	293	180	3,7	1YMX052507M0001
UCE 24	17,5 24	6-125 6-125	442	327	245	306	570	468	443	300	6,9	1YMX052509M0001 1YMX052509M0001
UCE 24L	24	80-125	537	327	245	306	675	563	538	380	7,4	1YMX052511M0001
UCE 36	36	6-40	537	422	340	401	675	563	538	380	7,6	1YMX052513M0001

CEF test fuse-link 3,6/7,2-36 kV for test of striker system.

Catalogue No.	Weight [kg]	Dimension in mm	
		e*	Total lenght
1YMX300062M0001	1,4	192 292 442 537	605

*) Adjustable
The striker has a force-travel characteristic as shown in the figure on page 6.

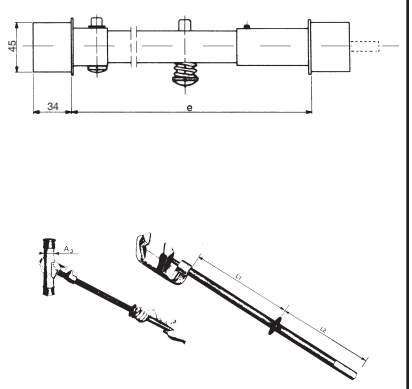

Operating tong for fuse links CEF 3,6/7,2 – 36 kV

Catalogue No.	Test voltage [kV]	Weight [kg]
1YMX053006M001	100	2,2

Dimensions in mm		
L1	L2	A3(Ø)
700	600	30-90

High voltage current limiting

fuse links type CEF

9. DATA AND DIMENSION CEF-BS

Type	Rated voltage [kV]	Rated current [A]	L/D [mm]	A [mm]	Catalogue No.	EAN13 Codes
CEF-BS	3,6/7,2	6	305/65	340	1YMB531007M0001	5901436020721
CEF-BS	3,6/7,2	10	305/65	340	1YMB531007M0002	5901436020738
CEF-BS	3,6/7,2	16	305/65	340	1YMB531007M0003	5901436020745
CEF-BS	3,6/7,2	25	305/65	340	1YMB531007M0004	5901436020752
CEF-BS	3,6/7,2	40	305/65	340	1YMB531007M0005	5901436020769
CEF-BS	3,6/7,2	50	305/65	340	1YMB531007M0006	5901436020776
CEF-BS	3,6/7,2	63	305/65	340	1YMB531007M0007	5901436020783
CEF-BS	3,6/7,2	80	305/87	340	1YMB531007M0008	5901436020790
CEF-BS	3,6/7,2	100	305/87	340	1YMB531007M0009	5901436020806
CEF-BS	3,6/7,2	125	405/87	440	1YMB531007M0010	5901436020813
CEF-BS	3,6/7,2	160	405/87	440	1YMB531007M0011	5901436020820
CEF-BS	3,6/7,2	200	405/87	440	1YMB531007M0012	5901436020837
CEF-BS	12	6	405/65	440	1YMB531008M0001	5901436021179
CEF-BS	12	10	405/65	440	1YMB531008M0002	5901436021186
CEF-BS	12	16	405/65	440	1YMB531008M0003	5901436021193
CEF-BS	12	25	405/65	440	1YMB531008M0004	5901436021209
CEF-BS	12	40	405/65	440	1YMB531008M0005	5901436021216
CEF-BS	12	50	405/65	440	1YMB531008M0006	5901436021223
CEF-BS	12	63	405/65	440	1YMB531008M0007	5901436021230
CEF-BS	12	80	405/87	440	1YMB531008M0008	5901436021247
CEF-BS	12	100	405/87	440	1YMB531008M0009	5901436021254
CEF-BS	12	125	555/87	580	1YMB531008M0010	5901436021261
CEF-BS	12	160	555/87	590	1YMB531008M0011	5901436021278
CEF-BS	12	200	555/87	590	1YMB531008M0012	5901436021285
CEF-BS	17,5	6	405/65	442	1YMB531009M0001	5901436021506
CEF-BS	17,5	10	405/65	590	1YMB531009M0002	5901436021513
CEF-BS	17,5	16	405/65	590	1YMB531009M0003	5901436021520
CEF-BS	17,5	25	405/65	448	1YMB531009M0004	5901436021537
CEF-BS	17,5	40	405/87	590	1YMB531009M0005	5901436021544
CEF-BS	17,5	50	405/87	590	1YMB531009M0006	5901436021551
CEF-BS	17,5	63	405/87	590	1YMB531009M0007	5901436021568
CEF-BS	17,5	80	555/87	590	1YMB531009M0008	5901436021575
CEF-BS	17,5	100	555/87	590	1YMB531009M0009	5901436021582
CEF-BS	17,5	125	555/87	590	1YMB531009M0010	5901436021599
CEF-BS	24	6	555/65	590	1YMB531010M0001	5901436021773
CEF-BS	24	10	555/65	590	1YMB531010M0002	5901436021780
CEF-BS	24	16	555/65	590	1YMB531010M0003	5901436021797
CEF-BS	24	25	555/65	590	1YMB531010M0004	5901436021803
CEF-BS	24	40	555/65	590	1YMB531010M0005	5901436021810
CEF-BS	24	50	555/87	590	1YMB531010M0006	5901436021827
CEF-BS	24	63	555/87	590	1YMB531010M0007	5901436021834
CEF-BS	24	80	650/87	685		
CEF-BS	24	100	650/87	685		
CEF-BS	24	125	650/87	685		

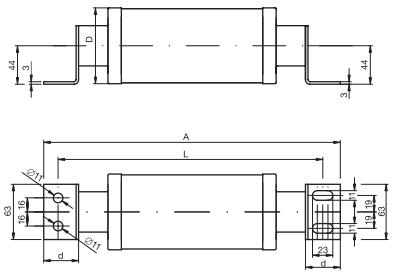

Dimension CEF-BS-B

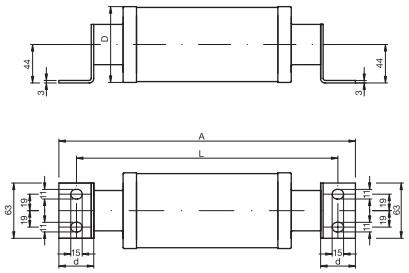

Dimension CEF-BS-C

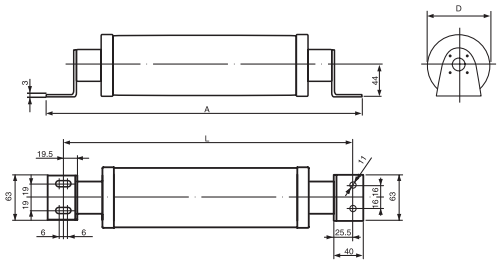

Dimension CEF-BS

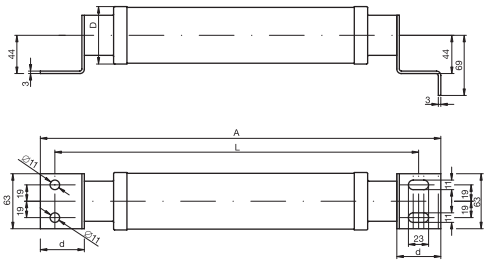

Dimension CEF-BS-D

10. DATA AND DIMENSION CEF-BS ACC. TO EN 60282-1:1996

Type	Rated voltage [kV]	Rated current [A]	L/D [mm]	A/d [mm]	Catalogue No.	EAN13 Codes
CEF-BS-B	3,6/7,2	6	305/65	340/40	1YMB531007M0021	5901436020844
CEF-BS-B	3,6/7,2	10	305/65	340/40	1YMB531007M0022	5901436020851
CEF-BS-B	3,6/7,2	16	305/65	340/40	1YMB531007M0023	5901436020868
CEF-BS-B	3,6/7,2	25	305/65	340/40	1YMB531007M0024	5901436020875
CEF-BS-B	3,6/7,2	40	305/65	340/40	1YMB531007M0025	5901436020882
CEF-BS-B	3,6/7,2	50	305/65	340/40	1YMB531007M0026	5901436020899
CEF-BS-B	3,6/7,2	63	305/65	340/40	1YMB531007M0027	5901436020905
CEF-BS-B	3,6/7,2	80	305/87	340/40	1YMB531007M0028	5901436020912
CEF-BS-B	3,6/7,2	100	305/87	340/40	1YMB531007M0029	5901436020929
CEF-BS-D	3,6/7,2	125	419/87	461/50,5	1YMB531007M0030	5901436020936
CEF-BS-D	3,6/7,2	160	419/87	461/50,5	1YMB531007M0031	5901436020943
CEF-BS-D	3,6/7,2	200	419/87	461/50,5	1YMB531007M0032	5901436020950
CEF-BS-D	12	6	419/65	461/50,5	1YMB531008M0021	5901436021292
CEF-BS-D	12	10	419/65	461/50,5	1YMB531008M0022	5901436021308
CEF-BS-D	12	16	419/65	461/50,5	1YMB531008M0023	5901436021315
CEF-BS-D	12	25	419/65	461/50,5	1YMB531008M0024	5901436021322
CEF-BS-D	12	40	419/65	461/50,5	1YMB531008M0025	5901436021339
CEF-BS-D	12	50	419/65	461/50,5	1YMB531008M0026	5901436021346
CEF-BS-D	12	63	419/65	461/50,5	1YMB531008M0027	5901436021353
CEF-BS-D	12	80	419/87	461/50,5	1YMB531008M0028	5901436021360
CEF-BS-D	12	100	419/87	461/50,5	1YMB531008M0029	5901436021377
CEF-BS-B	12	125	553/87	590/40	1YMB531008M0030	5901436021384
CEF-BS-B	12	160	553/87	590/40	1YMB531008M0031	5901436021391
CEF-BS-B	12	200	553/87	590/40	1YMB531008M0032	5901436021407
CEF-BS-D	17,5	6	419/65	461/50,5	1YMB531009M0021	5901436021605
CEF-BS-D	17,5	10	419/65	461/50,5	1YMB531009M0022	5901436021612
CEF-BS-D	17,5	16	419/65	461/50,5	1YMB531009M0023	5901436021629
CEF-BS-D	17,5	25	419/65	461/50,5	1YMB531009M0024	5901436021636
CEF-BS-D	17,5	40	419/87	461/50,5	1YMB531009M0025	5901436021643
CEF-BS-D	17,5	50	419/87	461/50,5	1YMB531009M0026	5901436021650
CEF-BS-D	17,5	63	419/87	461/50,5	1YMB531009M0027	5901436021667
CEF-BS-B	17,5	80	553/87	590/40	1YMB531009M0028	5901436021674
CEF-BS-B	17,5	100	553/87	590/40	1YMB531009M0029	5901436021681
CEF-BS-B	17,5	125	553/87	590/40	1YMB531009M0030	5901436021698
CEF-BS-B	24	6	553/65	590/40	1YMB531010M0021	5901436021841
CEF-BS-B	24	10	553/65	590/40	1YMB531010M0022	5901436021858
CEF-BS-B	24	16	553/65	590/40	1YMB531010M0023	5901436021865
CEF-BS-B	24	25	553/65	590/40	1YMB531010M0024	5901436021872
CEF-BS-B	24	40	553/65	590/40	1YMB531010M0025	5901436021889
CEF-BS-B	24	50	553/87	590/40	1YMB531010M0026	5901436021896
CEF-BS-B	24	63	553/87	590/40	1YMB531010M0027	5901436021902
CEF-BS-C	3,6/7,2	6	305/65	340/40	1YMB531007M0041	5901436020967
CEF-BS-C	3,6/7,2	10	305/65	340/40	1YMB531007M0042	5901436020974
CEF-BS-C	3,6/7,2	16	305/65	340/40	1YMB531007M0043	5901436020981
CEF-BS-C	3,6/7,2	25	305/65	340/40	1YMB531007M0044	5901436020998
CEF-BS-C	3,6/7,2	40	305/65	340/40	1YMB531007M0045	5901436021001
CEF-BS-C	3,6/7,2	50	305/65	340/40	1YMB531007M0046	5901436021018
CEF-BS-C	3,6/7,2	63	305/65	340/40	1YMB531007M0047	5901436021025
CEF-BS-C	3,6/7,2	80	305/87	340/40	1YMB531007M0048	5901436021032
CEF-BS-C	3,6/7,2	100	305/87	340/40	1YMB531007M0049	5901436021049
CEF-BS-C	3,6/7,2	6	320/65	361/50,5	1YMB531007M0061	5901436021087
CEF-BS-C	3,6/7,2	10	320/65	361/50,5	1YMB531007M0062	5901436021094
CEF-BS-C	3,6/7,2	16	320/65	361/50,5	1YMB531007M0063	5901436021100
CEF-BS-C	3,6/7,2	25	320/65	361/50,5	1YMB531007M0064	5901436021117
CEF-BS-C	3,6/7,2	40	320/65	361/50,5	1YMB531007M0065	5901436021124
CEF-BS-C	3,6/7,2	50	320/65	361/50,5	1YMB531007M0066	5901436021131
CEF-BS-C	3,6/7,2	63	320/65	361/50,5	1YMB531007M0067	5901436021148
CEF-BS-C	3,6/7,2	80	320/87	361/50,5	1YMB531007M0068	5901436021155
CEF-BS-C	3,6/7,2	100	320/87	361/50,5	1YMB531007M0069	5901436021162
CEF-BS-C	3,6/7,2	125	400/87	440/40	1YMB531007M0050	5901436021056
CEF-BS-C	3,6/7,2	160	400/87	440/40	1YMB531007M0051	5901436021063
CEF-BS-C	3,6/7,2	200	400/87	440/40	1YMB531007M0052	5901436021070
CEF-BS-C	12	6	400/65	440/40	1YMB531008M0041	5901436021414
CEF-BS-C	12	10	400/65	440/40	1YMB531008M0042	5901436021421
CEF-BS-C	12	16	400/65	440/40	1YMB531008M0043	5901436021438
CEF-BS-C	12	25	400/65	440/40	1YMB531008M0044	5901436021445
CEF-BS-C	12	40	400/65	440/40	1YMB531008M0045	5901436021452
CEF-BS-C	12	50	400/65	440/40	1YMB531008M0046	5901436021469
CEF-BS-C	12	63	400/65	440/40	1YMB531008M0047	5901436021476
CEF-BS-C	12	80	400/87	440/40	1YMB531008M0048	5901436021483
CEF-BS-C	12	100	400/87	440/40	1YMB531008M0049	5901436021490
CEF-BS-C	17,5	6	400/65	440/40	1YMB531009M0041	5901436021704
CEF-BS-C	17,5	10	400/65	440/40	1YMB531009M0042	5901436021711
CEF-BS-C	17,5	16	400/65	440/40	1YMB531009M0043	5901436021728
CEF-BS-C	17,5	25	400/65	440/40	1YMB531009M0044	5901436021735
CEF-BS-C	17,5	40	400/87	440/40	1YMB531009M0045	5901436021742
CEF-BS-C	17,5	50	400/87	440/40	1YMB531009M0046	5901436021759
CEF-BS-C	17,5	63	400/87	440/40	1YMB531009M0047	5901436021766

Index

High voltage current limiting

fuse links type CEF-S

1. GENERALLY

As appears from the chart High Voltage Current Limiting fuse links type CEF-S have a minimum current value ($I_{0,1sec}$) which makes the fuse link interrupt the fault current within 100 ms. This ensures very good protection and prevents faults in low voltage switchgears. The current value for the different fuse link types is shown for the total maximum breaking time of 100 ms. For bigger fault currents the maximum total breaking time will be shorter. CEF-S fuses are specially designed to achieve as low as possible value for the breaking current at 100 ms. However, this results in the reduction of the margin, which for standard CEF fuses prevents fuse link operation due to inrush currents developed when an unloaded power transformer is energised. At the given $I_{0,1sec}$ values the total breaking time is maximum 100ms – this value includes maximum pre-arcing time, arcing time and production tolerance.

2. DIMENSIONS AND ELECTRICAL DATA

U_n	I_n	e	D	I_1	I_3	$I_{0.1sek}$	Pn	V	Ro
[kV]	[A]	[mm]	[mm]	[kA]	[A]	[A]	[Watt]	[kg]	[mΩ]
12	10	292	65	50	55	48	27	2,3	187,0
	16	292	65	50	55	80	38	2,3	108,5
	20	292	65	50	72	120	39	2,3	72,3
	25	292	65	50	72	160	45	2,3	46,5
	40	292	65	50	100	240	54	2,3	24,5
	50	292	65	50	190	330	70	2,3	18,8
24	10	442	65	25	55	48	54	3	373,2
	16	442	65	25	55	80	67	3	186,6
	20	442	65	25	72	120	69	3	124,4
	25	442	65	25	72	160	70	3	93,3
	40	442	65	25	110	240	122	3	48,8

Symbols

e = see figure

D = see figure

I_1 = maximum rated breaking current

$I_{0,1\ sek}$ = lowest current which gives maximum breaking time smaller than or equal to 100ms

P_n = power losses at rated current

V = weight

R_o = resistance at room temperature

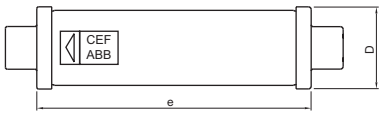

3. TIME-CURRENT CHARACTERISTICS

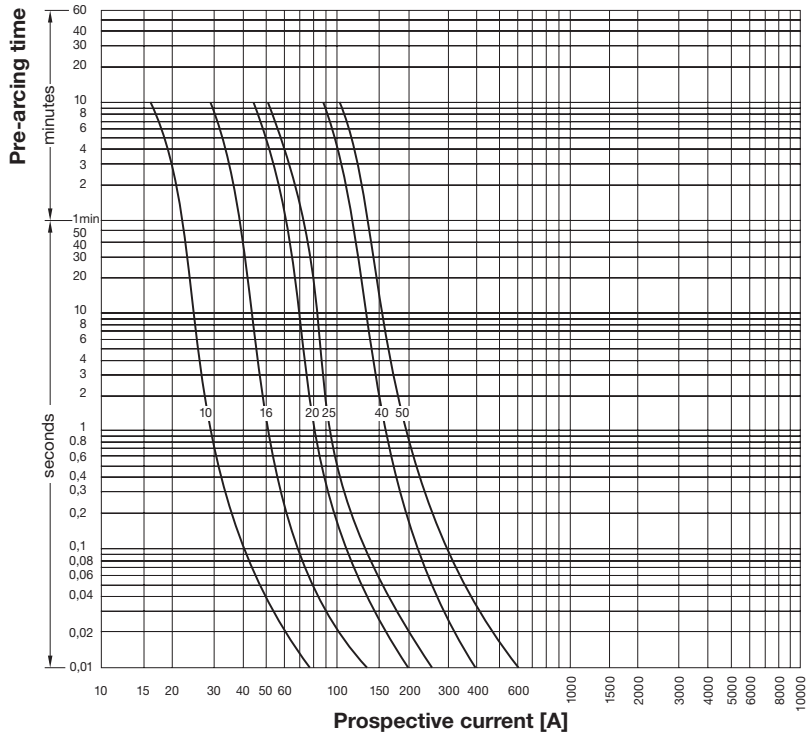

Melting times

The characteristic curves are the same for rated voltage 12 and 24 kV taken from cold condition.

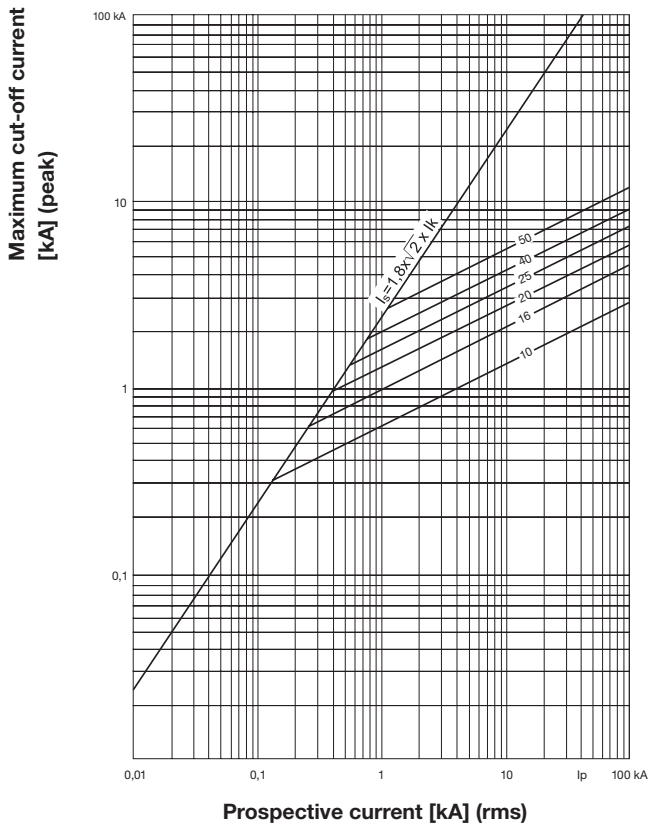

4. SELECTION TABLE FOR TRANSFORMER PROTECTION DIMENSION AND CHARACTERISTIC

Rated Voltage	50	100	200	315	500	630	800
10.5 kV	10	16	25	25	40	40	50
12 kV	10	16	25	25	40	40	50
21 kV	10	10	16	16	20	20	25
24 kV	10	10	16	16	20	20	25

Fuse link selected according to the selection table meet the following requirements:
- Rated current of the fuse link > 1,1 x I_n of the transformers rated current (I_n)
- The maximum breaking time is 100ms or less for currents bigger than or equal to $I_{0,1\ sec}$.

Transformer Rating	Voltage	Fuse Link rating	$I_{0,1\ sec}$
[kVA]	[kV]	[A]	[A]
315	12	25	160
500	12	40	240
630	12	40	240
800	12	50	330
315	24	16	80
500	24	20	120
630	24	20	120
800	24	25	160

For different power transformer sizes and rated voltages, power losses are as shown in the table below. The measurements were done at the rated power and air cooling according to IEC 282-1. The losses are mentioned per single fuse. If the fuse link shall be used in compact switchgears, where cooling is limited, the supplier shall be contacted regarding maximum permitted power losses and required fuse link derating.

Transformer size	Rated Voltage			
[kVA]	[kV]			
	10.5	12	21	24
	Power loss per single fuse link at the transformer's rated current [W]			
50	2	2	1	1
100	5	4	4	3
200	9	7	8	6
315	22	17	20	15
500	26	20	31	24
630	42	32	49	38
800	54	42	52	40

5. ORDERING TABLE

Type	Rated voltage	Rated current	e/D	Catalouge No	EAN13 Codes	Weight
	[kV]	[A]	[mm]			[kg]
CEF-S	12	10	292/65	1YMB531011M0001	5901436021919	2,3
CEF-S	12	16	292/65	1YMB531011M0002	5901436021926	2,3
CEF-S	12	20	292/65	1YMB531011M0003	5901436021933	2,3
CEF-S	12	25	292/65	1YMB531011M0004	5901436021940	2,3
CEF-S	12	40	292/65	1YMB531011M0005	5901436021957	2,3
CEF-S	12	50	292/65	1YMB531011M0006	5901436021964	2,3
CEF-S	24	10	442/65	1YMB531012M0001	5901436021988	3
CEF-S	24	16	442/65	1YMB531012M0002	5901436021995	3
CEF-S	24	20	442/65	1YMB531012M0003	5901436022008	3
CEF-S	24	25	442/65	1YMB531012M0004	5901436022015	3
CEF-S	24	40	442/65	1YMB531012M0005	5901436022022	3

Index

Voltage Transformer Fuses

fuse links type CEF-VT

Rated voltage: 7,2/24 kV
Rated current: 2-6,3 A

1. GENERAL

The new generation of fuse link type CEF-VT are designed and tested according to IEC 60282-1:2002.

Dimensionally the fuse links are in accordance with DIN 43625. CEF-VT fuses are applicable as voltage transformer fuses and as typical protection requesting current limiting back-up fuses.

ABB's high voltage fuse links have the following properties:

– Low minimum breaking current
– Low power losses
– Low arc-voltage
– High breaking capacity
– High current limitation.

CEF-VT fuses are of back-up type. They have a zone between the minimum melting current and the minimum breaking current where the fuse links may fail to interrupt.

For CEF-VT fuse links this zone is very narrow. The minimum breaking current I_3 for any type is specified in the table on p. 25.

2. OVERVOLTAGES

In order to be current limiting, the fuse link must generate an arc-voltage exceeding the instantaneous value of the operating voltage. The switching voltage generated by the CEF-VT fuse link is below the maximum permissible value acc. to IEC 60282-1:2002. The CEF-VT fuse link can safely be used the system line voltage of 7,2/12 and 17/24 kV.

3. CHOICE OF FUSE LINKS

Selection of voltage transformer fuses

ABB recommends using voltage transformer fuses type WBP and CEF-VT in supplying circuits of medium voltage single/double insulated poles voltage transformers. Voltage transformer fuses provide:

1) Electrical shock protection in case of main insulation damage of voltage transformer and high voltage penetration into low voltage side of voltage transformer.
2) Protection of switchgear apparatus from internal short circuits results of voltage transformers.

Main selection rules of voltage transformer fuses are similar to current limiting fuses (type CEF) for protection of distribution transformers

Choice of rated voltage

- The rated current of the fuse links should be equal to, or higher than the maximum operating system voltage of installation place

Choice of rated current

- The rated voltage of fuse links should be higher than maximum continuous current of voltage transformer (depends on voltage transformer load level).

Moreover we should observe:

a) Starting conditions
   - Initial starting current of voltage transformer should not cause fuse tripping in normal working condition.
b) Short circuit conditions
   - Rated breaking current of fuse links should be higher than prospective value of short circuit in installation place.
c) Overvoltages
   - Impulse insulation withstand of electrical system (switchgear) should be higher than switching overvoltages generated by fuse links.

Voltage transformer fuses do not protect voltage transformer against overloading results.

4. ORDERING TABLE

High-voltage – HRC fuse links

Type	Rated voltage Un [kV]	Rated current [A]	Length e [mm]	Diameter D [mm]	Catalogue No.	EAN13 Codes	Weight [kg]
CEF-VT	7,2/12	2	192	53	1YMB531048M0001	5901436024378	1,50
CEF-VT	7,2/12	2	292	53	1YMB531049M0001	5901436024408	1,60
CEF-VT	7,2/12	2	192	53	1YMB531048M0002	5901436024385	1,50
CEF-VT	7,2/12	2	292	53	1YMB531049M0002	5901436024415	1,60
CEF-VT	7,2/12	6,3	192	53	1YMB531048M0003	5901436024392	1,30
CEF-VT	7,2/12	6,3	292	53	1YMB531049M0003	5901436024422	1,90
CEF-VT	17,5/24	2	292	53	1YMB531050M0001	5901436024439	1,60
CEF-VT	17,5/24	2	442	53	1YMB531046M0001	5901436024316	2,40
CEF-VT	17,5/24	6,3	292	53	1YMB531050M0003	5901436024446	1,90
CEF-VT	17,5/24	6,3	442	53	1YMB531046M0003	5901436024323	2,50

5. DATA AND DIMENSIONS CEF-VT

Type	Striker	Rated voltage U_n [kV]	Rated current I_n[kV]	Length e [mm]	Diameter D [mm]	Short circuit current I_1 [kA]	Minimum breaking current I_3 [A]	Rated power losses P_n [W]	Resistance R_o [mΩ]
CEF-VT	no	7,2/12	2	192	53	63	27	7,4	1,50
CEF-VT	no	7,2/12	2	292	53	63	27	7,4	1,50
CEF-VT	yes	7,2/12	2	192	53	63	27	7,4	1,34
CEF-VT	yes	7,2/12	2	292	53	63	27	7,4	1,34
CEF-VT	yes	7,2/12	6,3	192	53	63	41	18	0,33
CEF-VT	yes	7,2/12	6,3	292	53	63	41	18	0,33
CEF-VT	no	17,5/24	2	292	53	31,5	32	17	3,10
CEF-VT	no	17,5/24	2	442	53	31,5	32	17	3,10
CEF-VT	yes	17,5/24	6,3	292	53	31,5	46	35	0,60
CEF-VT	yes	17,5/24	6,3	442	53	31,5	46	35	0,60

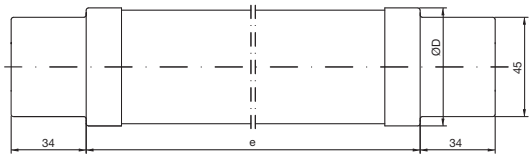

Index

High voltage current limiting

fuse links for MOTOR circuit applications type CMF

1. GENERAL

The fuse links type CMF are specially designed for motor circuit applications. They are tested according to the IEC Publication 60282-1 (IEC 282-1) and Publication 644. The IEC 644 applies to fuse links used with motors started direct-on-line on alternating current systems. High voltage fuses used in motor circuits must have the ability to withstand, without deterioration, the repeated surges associated with motor starting.

The dimensions are in accordance with DIN 43625, i.e. the 3,6 kV rating is realized in the normal 12 kV length (e = 292 mm). The 7,2 kV and 12 kV rating in the 24 kV length (e = 442 mm).

Special connection elements can be delivered in cases where fuses have to be paralleled.

ABB's motor fuses have the following properties:

- higher current rating within single body dimensions
- tested according to IEC 644 which guaranties excellent ability to withstand repeated motor starting conditions
- low power losses
- low minimum breaking current
- high breaking capacity and excellent short circuit current limitation.

Although a motor fuse is normally run at a stationary current which is much lower than the fuse rated current, the low-loss characteristics of the CMF fuses make them especially suitable in compact contactor compartments.

2. ORDERING TABLE TYPE CMF

High voltage – fuse links

Type	Rated voltage [kV]	Rated Current [A]	e [mm]	D [mm]	Catalogue No.	EAN13 Codes	Weight [kg]
CMF	3,6	100	292	65	1YMB531028M0001	5901436023197	2,3
CMF	3,6	160	292	65	1YMB531028M0002	5901436023203	2,3
CMF	3,6	200	292	87	1YMB531028M0003	5901436023210	2,6
CMF	3,6	250	292	87	1YMB531028M0004	5901436023227	3,8
CMF	3,6	315	292	87	1YMB531028M0005	5901436023234	3,8
CMF	7,2	63	442	65	1YMB531029M0001	5901436023241	3,0
CMF	7,2	100	442	65	1YMB531029M0002	5901436023258	3,0
CMF	7,2	160	442	65	1YMB531029M0003	5901436023265	3,0
CMF	7,2	200	442	87	1YMB531029M0004	5901436023272	5,3
CMF	7,2	250	442	87	1YMB531029M0005	5901436023289	5,3
CMF	7,2	315	442	87	1YMB531029M0006	5901436023296	5,3
CMF	12	63	442	65	1YMB531030M0001	5901436023302	3,0
CMF	12	100	442	87	1YMB531030M0002	5901436023319	5,3
CMF	12	160	442	87	1YMB531030M0003	5901436023326	5,3
CMF	12	200	442	87	1YMB531030M0004	5901436023333	5,3

3. ORDERING TABLE UCM

Type	Rated voltage [kV]	Dimensions in mm							Weight [kg]	Catalogue No.
		A	A_1	A_2	H	K	K_1	B		
UCM	3,6	232	160	220	410	318	293	180	3,7	1YMX139037R001
UCM	7,2/12	232	160	220	570	468	443	300	4,2	1YMX139037R002

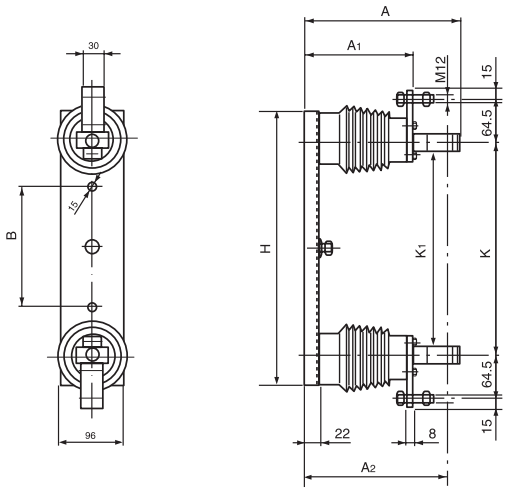

FUSE BASE type UCM

4. ORDERING TABLE TYPE CMF-BS

Type	Rated voltage [kV]	Rated Current [A]	L/D [mm]	A/d [mm]	Catalogue No.	EAN13 Codes	Weight [kg]
CMF-BS-C	3,6	100	400/65	440/40	1YMB531031M0021	5901436023449	2,6
CMF-BS-C	3,6	160	400/65	440/40	1YMB531031M0022	5901436023456	2,6
CMF-BS-C	3,6	200	400/87	440/40	1YMB531031M0023	5901436023463	3,9
CMF-BS-C	3,6	250	400/87	440/40	1YMB531031M0024	5901436023470	4,1
CMF-BS-C	3,6	315	400/87	440/40	1YMB531031M0025	5901436023487	4,1
CMF-BS-D	3,6	100	419/65	461/50,5	1YMB531031M0011	5901436023395	2,6
CMF-BS-D	3,6	160	419/65	461/50,5	1YMB531031M0012	5901436023401	2,6
CMF-BS-D	3,6	200	419/87	461/50,5	1YMB531031M0013	5901436023418	4,1
CMF-BS-D	3,6	250	419/87	461/50,5	1YMB531031M0014	5901436023425	4,1
CMF-BS-D	3,6	315	419/87	461/50,5	1YMB531031M0015	5901436023432	4,1
CMF-BS-B	7,2	63	553/65	590/40	1YMB531032M0021	5901436023555	3,3
CMF-BS-B	7,2	100	553/65	590/40	1YMB531032M0022	5901436023562	3,3
CMF-BS-B	7,2	160	553/65	590/40	1YMB531032M0023	5901436023579	3,3
CMF-BS-B	7,2	200	553/87	590/40	1YMB531032M0024	5901436023586	5,6
CMF-BS-B	7,2	250	553/87	590/40	1YMB531032M0025	5901436023593	5,6
CMF-BS-B	7,2	315	553/87	590/40	1YMB531032M0026	5901436023609	5,6
CMF-BS-B	12	63	553/65	590/40	1YMB531033M0021	5901436023654	3,3
CMF-BS-B	12	100	553/87	590/40	1YMB531033M0022	5901436023661	5,6
CMF-BS-B	12	160	553/87	590/40	1YMB531033M0023	5901436023678	5,6
CMF-BS-B	12	200	553/87	590/40	1YMB531033M0024	5901436023685	5,6
CMF-BS	3,6	100	405/65	440/40	1YMB531031M0001	5901436023340	2,6
CMF-BS	3,6	160	405/65	440/40	1YMB531031M0002	5901436023357	2,6
CMF-BS	3,6	200	405/87	440/40	1YMB531031M0003	5901436023364	4,1
CMF-BS	3,6	250	405/87	440/40	1YMB531031M0004	5901436023371	4,1
CMF-BS	3,6	315	405/87	440/40	1YMB531031M0005	5901436023388	4,1
CMF-BS	7,2	63	555/65	590/40	1YMB531032M0001	5901436023494	3,3
CMF-BS	7,2	100	555/65	590/40	1YMB531032M0002	5901436023500	3,3
CMF-BS	7,2	160	555/65	590/40	1YMB531032M0003	5901436023517	3,3
CMF-BS	7,2	200	555/87	590/40	1YMB531032M0004	5901436023524	5,6
CMF-BS	7,2	250	555/87	590/40	1YMB531032M0005	5901436023531	5,6
CMF-BS	7,2	315	555/87	590/40	1YMB531032M0006	5901436023548	5,6
CMF-BS	12	63	555/65	590/40	1YMB531033M0001	5901436023616	3,3
CMF-BS	12	100	555/87	590/40	1YMB531033M0002	5901436023623	5,6
CMF-BS	12	160	555/87	590/40	1YMB531033M0003	5901436023630	5,6
CMF-BS	12	200	555/87	590/40	1YMB531033M0004	5901436023647	5,6

High voltage current limiting

fuse links for MOTOR circuit applications type CMF

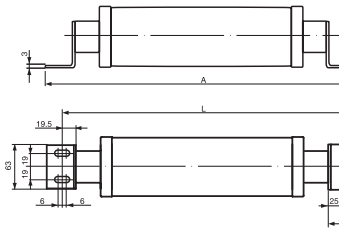

Dimension CMF-BS

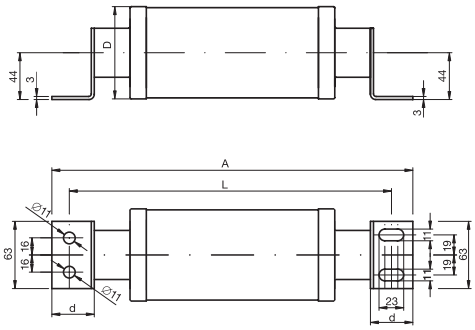

Dimension CMF-BS-B

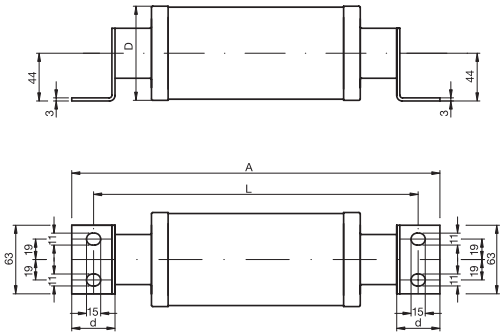

Dimension CMF-BS-C

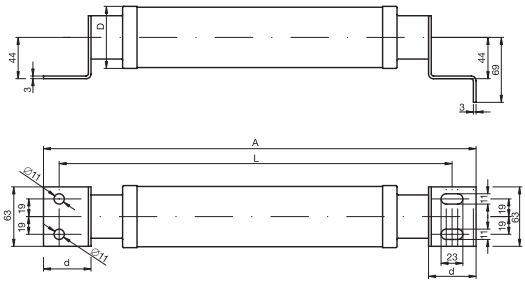

Dimension CMF-BS-D

5. PRE-ARCING TIMES

The characteristics are equal or all rated voltages and are recorded from cold condition.

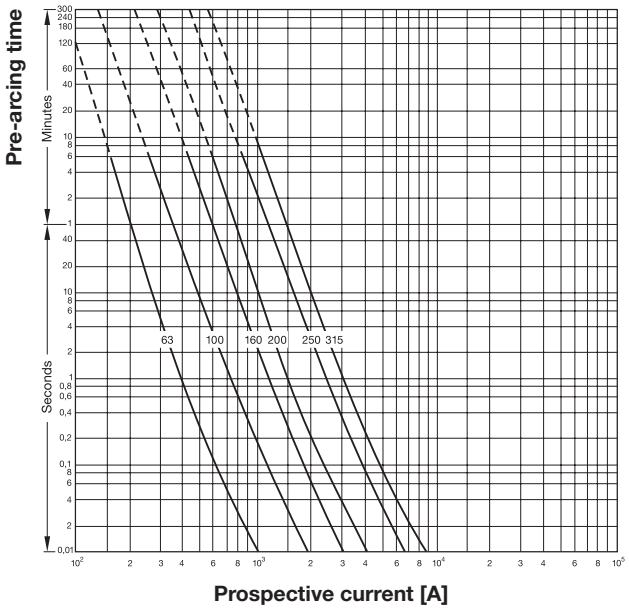

6. CURRENT LIMITATION

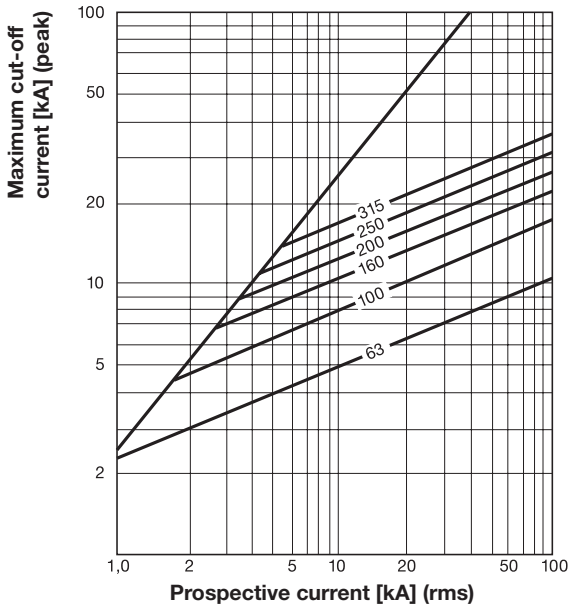

High voltage current limiting

fuse links for MOTOR circuit applications type CMF

7. CHOICE OF FUSE LINKS

Choice of rated current I_N

The minimum permissible current rating of the fuse link for motor protection may be determined from the selection charts I, II and III. The three different charts are for run-up times of 6, 15 and 60 seconds respectively.

Each chart contains different characteristics, depending on the number of starts per hour. Of this specific number of starts per hour, the first two are in immediate succession, the rest being evenly spaced in the 1 hour period. The number of starts per hour indicates the time interval between separate starts. For example, 4 starts in 15 minutes are represented by 16 starts per hour. On the horizontal axis of the selection chart, the motor starting current is given, and along the vertical axis the current rating of the fuse link is found.

Selection procedure:
– Select the charts which are appropriate for the run-up time of the motor,
– select the starting current along the horizontal axis,
– depending on the number of starts per hour, select the correct characteristic (2, 4, 8, 16, 32),
– read of the correct rating of the fuse link onthe vertical axis.

The main function of motor fuses is protection against short circuits only. That is why fuses are selected to withstand start up currents only. Minimum breaking current has very limited importance for such a application.

Example:	A	B
Starting current of the motor	850 A	250 A
Run-up time	6 sec.	15 sec.
Number of starts per hour	2	16
Chart number	1	2
Rated current of fuse link	250 A	160 A

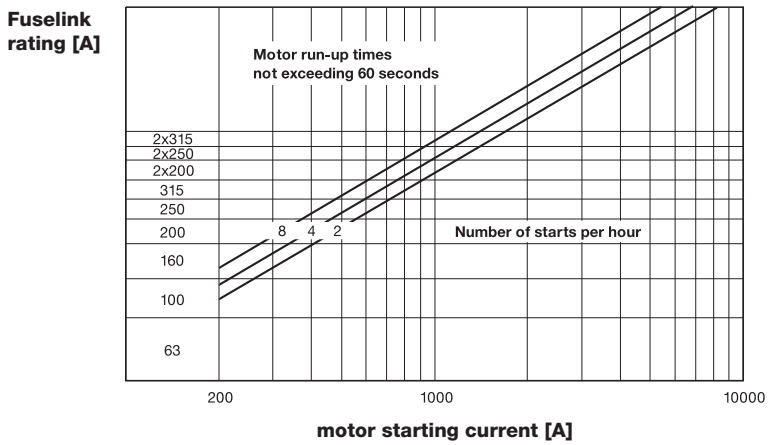

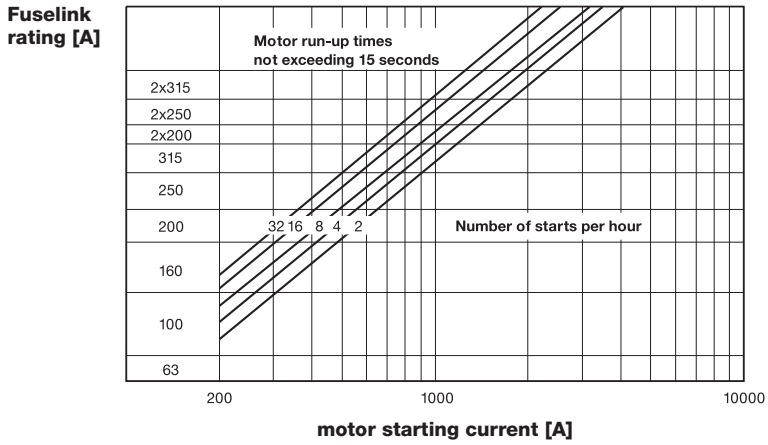

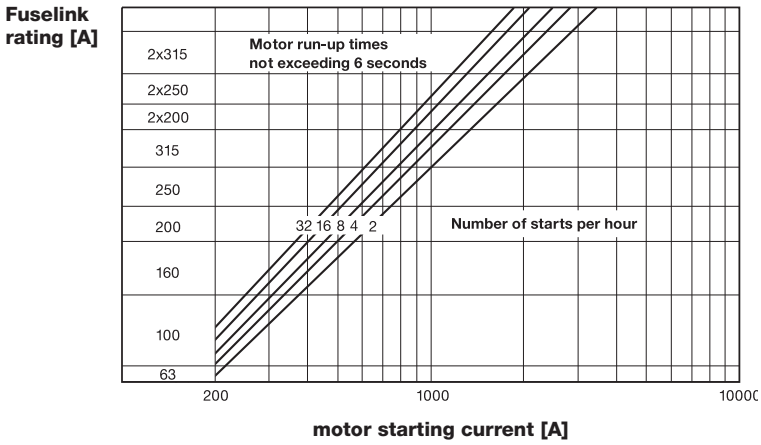

8. THE K-FACTOR

According to the IEC 60644, the K-factor is a factor (less than unity) defining an overload characteristic to which the fuse link may be repeatedly subjected under specified motor starting conditions without deterioration. The overload characteristic is obtained by multiplying the current on the prearcing characteristic (melting time characteristics) by K. The Value of K given in the data table is chosen at 10 seconds melting time, and is valid for melting times between 5 and 60 seconds.

9. DATA AND DIMENSIONS CMF

U_N	I_N	e	D	K*	I_1	I_3	R_o	P_N	Minimum $I^2 x t$	Maximum $I^2 x t$
[kV]	[A]	[mm]	[mm]	-	[kA]	[A]	[mΩ]	[W]	Pre-arc A^2s	Interruption A^2s
3,6	100	292	65	0,75	50	275	3,20	49	$1,4 \times 10^4$	17×10^4
	160	292	65	0,7	50	400	1,92	75	$3,8 \times 10^4$	50×10^4
	200	292	87	0,7	50	500	1,40	75	$7,6 \times 10^4$	71×10^4
	250	292	87	0,6	50	760	0,97	90	14×10^4	115×10^4
	315	292	87	0,6	50	900	0,81	122	21×10^4	180×10^4
7,2	63	442	65	0,75	50	175	8,50	45	$0,48 \times 10^4$	$6,5 \times 10^4$
	100	442	65	0,75	50	275	4,86	67	$1,40 \times 10^4$	18×10^4
	160	442	65	0,7	50	400	2,92	119	$3,8 \times 10_4$	54×10^4
	200	442	87	0,7	50	500	2,12	118	$7,6 \times 10^4$	75×10^4
	250	442	87	0,6	50	800	1,48	142	14×10^4	120×10^4
	315	442	87	0,6	50	950	1,23	193	21×10^4	220×10^4
12	63	442	65	0,75	50	190	13,52	77	$0,48 \times 10^4$	11×10^4
	100	442	87	0,75	50	275	6,62	103	$1,4 \times 10^4$	20×10^4
	160	442	87	0,7	50	480	3,98	155	$3,8 \times 10^4$	70×10^4
	200	442	87	0,7	50	560	2,73	173	$9,3 \times 10^4$	91×10^4

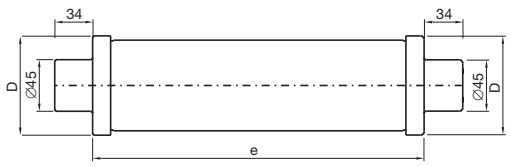

Legends:
e = see figure
D = see figure
K = K-factor acc. to IEC 60644
I_1 = max. short circuit current tested
I_3 = minimum breaking current
R_0 = resistance at room temperature
P_N = power loss at rated current

*) The K-factor is referred to the average value of current.

Voltage Transformer Fuses

Indoor - WBP Outdoor - BRT

Index

Voltage Transformer Fuses

Indoor - WBP Outdoor - BRT

1. FEATURES

– Unlimited breaking capacity
– Short–circuit current limiting
– Small dimensions.

2. APPLICATIONS

The WBP fuse–links are used to protect switchgear equipment against short–circuits in voltage transformers. Protection of switchgear equipment is very effective thanks to unlimited breaking capacity and short circuit current limitation. Thanks to very small dimensions WBP type fuse–links can be used in various types of switchgears, including flame–proof types.

3. ENVIRONMENTAL OPERATING CONDITIONS

The Type WBP... and BRT... Fuse–links can be operated under the following environmental conditions:

Table 1.

Temperature	Type of fuse-links			
	WBP		BRT	
	N3	T3	N1	T1
	From -5 °C to +40 °C	From -5 °C to +50 °C	From - 25 °C to +40 °C	From -10 °C to +50 °C
Relative humidity of ambient air at a temperature: N - +20 °C T - +30 °C	to 80%	to 95%	to 100%	to 100%
Height of installation above the see level	Up to 1000 m			

Designations:
N – Normal climate
T – Tropical wet and dry climate
1 – Outdoor installation
3 – Indoor installation

4. DESIGNATIONS AND VERSIONS

4.1 WBP indoor instrument transformer fuse–links numbering system

The numbering system for the WBP fuse–links has two alphanumerical sections as shown in the following diagram.

WBP	-	6
Indoor Fuse–link type		**Rated Voltage** **6** – 7,2 kV **10** – 12 kV **20** – 24 kV **30** – 36 kV

4.2 BRT outdoor instrument transforme fuse–links numbering system.

The numbering system for the BRT fuse–links has two alphanumerical sections as shown in the following diagram.

BRT	-	6
Outdoor Fuse–link type		**Rated Voltage** **6** – 7,2 and 12 kV **15** – 17,5 and 24 kV **30** – 36 kV

4.3 Indoor fuse–bases numbering system

The numbering system for indoor fuse–bases has two alphanumerical sections as shown in the following diagram.

PBPM	-	6
Fuse–base type		**Rated Voltage** **6** – 7,2 kV **10** – 12 kV **20** – 24 kV **30** – 36 kV

4.4 Outdoor fuse–bases numbering system

The numbering system for outdoor fuse–bases have four double alphanumerical sections as shown in the following diagram. A fuse–link when mounted on a fuse–base makes a complete fuse. For the available fuse–bases refer to Table 2.

PBPM	-	I	36	w.II-1
Fuse–base type		**Kind of fuse base** **I** – hanging type **III** – standing type	**Rated voltage 36 kV**	**Additional designation**

5. COMPLIANCE WITH STANDARDS

5.1 The fuse-links meet the requirements of the following standards:

– Polish Standard PN–77/E–06110
– British Standard BS:2692:1956
– Russian Standard GOST 2213:1959

5.2 The fuse–bases meet the requirements of the following standards:

– Polish Standard PN–77/E–06110
– German Standard VDE 0670 Teil 4/3 1967
– International Standard IEC 282–1 of 1985

6. HOW TO ORDER

Order by specyfying the product name, type symbol, rated value, rated current and quantity.
All additional demands which are not listed in this Catalogue should be agreed with the manufacturer by means of an Inquiry where the sources of requirements (regulations, standards, etc.) are to be apecified.

6.1 Order example

1. Type WBP–6 fuse–link for a rated voltage of 7.2 kV and rated current of 0,7A – 10 pcs
2. Type PBPM–6 Indoor fuse–base for a rated voltage of 7,2 kV – 20 pcs

[1] Insulating tube is made from glass (WBP) or porcelain (BRT)

7. SPECIFICATIONS

7.1 Technical data of fuse–links

Table 2

Fuse-link Type	Rated Voltage	Fre-quency	Rated current	Rated Breaking Current	Rated Breaking Capacity	Over-volt-ages	Weight	Resistance		Fuse-base Type
	U_n	f	I_n	I_{ws}	S_{ws}	U_m		Min.	Max.	
	kV	Hz	A	kA	MVA	kV	kg	Ω	Ω	
WBP-6	7,2	50 or 60	0,7	120	>1500	<23	0,12	42	52	**PBPM-6**
WBP-10	12		0,6	72		<38	0,16	62	72	**PBPM-10**
WBP-20	24		0,5	36		<75	0,20	135	165	**PBPM-20**
WBP-30	36		0,4	24		<112	0,25	225	275	**PBPM-30**
BRT-6	7,2/12	50 or 60	0,8	80[2]/48	>1000	<23	1,8	57	63	**-**
BRT-15	17,5/24			33[3]/24		<55	2,2	144	156	**PBPN-24-1**
BRT-30	36			16		<112	2,6	290	310	**PBWMNI36 w.II-1** **PBWMNIII 36 w.II-1**

The resistance are to be measured by an electrical bridge method or technical method using measuring instrument with accuracy class not worse than 0.5% at an ambient temperature of t = 20 °C ±2 °C.

[2] for U_n = 12 kV I_{ws} = 48 kA
[3] for U_n = 24 kV I_{ws} = 24 kA

Note: In case of installation of WBP fuses in closed housing and similar equipment characterised by heat exchange (stabilised ambient air temperature exceeds +40 °C) the value of nominal current In should be reduced by 0.1 A.

Voltage Transformer Fuses

Indoor - WBP Outdoor - BRT

7.2 Technical data of fuse–bases

Table 3

Type of fuse-base	Rated voltage	Frequency	Impulse withstand voltage of insulation		50 Hz withstand voltage of insulation		Type of fuse-link
	U_n	f	to earth	in pole	to earth	in pole	
	kV	Hz	kV	kV	kV	kV	
PBPM-6	7,2	50 or 60	60	70	27	35	WBP-6
PBPM-10	12		75	85	35	45	WBP-10
PBPM-20	24		125	145	55	75	WBP-20
PBPM-30	36		170	200	75	100	WBP-30
PBPN-24-1	24		125	145	55	75	BRT-15
PBWMNI 36 w.II-1	36		170	195	70	85	BRT-30
PBWMNIII 36 w.II-1	36		170	195	70	80	

PBPM – an indoor fuse–base with resin insulators
PBPN – an outdoor suspended fuse–base on 24 kV
PBWMNI 36 w.II–1 – an outdoor suspended fuse–base on 36 kV
PBWMNIII 36 w.II–1 – an outdoor fuse–base on 36 kV

Recommendation of fuse links selection for MV voltage transformer protection

ABB Sp. z o.o. recommends using instrument transformers fuse elements type WBT from our production portfolio as protection for ABB's voltage transformers types UMZ and UDZ equipped with fuse holder. Using instrument transformer fuses has two main functions; to protect distribution equipment against results of internal voltage transformers short circuits and to reduce probability of explosion possibility in case of damage of internal isolation of voltage transformers.

The selection of fuse element for protection of voltage transformer should be done mainly in dependence on rated primary voltage of voltage transformer*. The rated voltage of fuse element should be equal or higher of (phase to phase) rated voltage for primary winding of voltage transformer, for example for VT type UMZ 15-1 working with voltage $\sqrt{3}$ kV on primary winding, one should select fuse link type WBP-10 that rated voltage is 10 kV.

The rated current of fuse links type WBP was reduced from 0,8A to 0,4-0,7A (depending on U_n) starting from January 2001. The reason of this change was to improve cooperation between fuse link and voltage transformers.

Comparison of past voltage transformer fuse links type WBP with the new one is presented in the table below:

ABB Sp. z o.o. recommends to use new fuse links with limited rated current (0,4-0,7A) for protection voltage transformers type UMZ and UDZ instead of using former ones with rated current 0,8A.

Fuse-link Type	Rated Voltage	Rated continuous (till 12.2000)	Current continuous current (from 01.2001)
	U_n	I_n	I_n
	kV	A	A
WBP-6	7,2	0,8	0,7
WBP-10	12		0,6
WBP-20	24		0,5
WBP-30	36		0,4

* In rarely cases when the following criteria have been fulfilled:
1) instrument transformer is used with rated primary voltage below 3000 V;
2) power taken from instrument transformer is much higher then rated power output and it is close to the limit of thermal power output; the user should contact producer (ABB sp. z o.o.) to be individually advised regarding proper selection of voltage transformer protection.

8. DIMENSIONAL DRAWINGS

Dimensional drawing of WBP type fuse-links

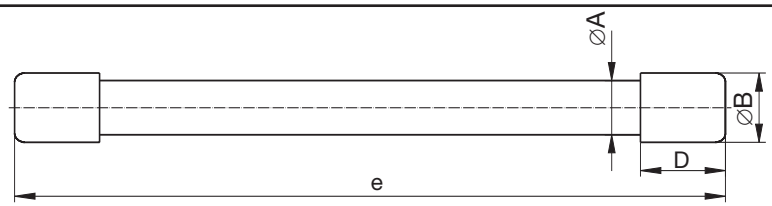

Notes:
Connections: silver-plated cooper.
Deviations of dimensions with no tolerance specified shall be within ±3%.

Fuse-link type	Dimensions [mm]			
	e	D	ØA	ØB
WBP-30	385±3	25	18	23
WBP-20	310±3	25	18	23
WBP-10	250±3	25	18	23
WBP-6	210±3	25	18	23

B15/04.00 – Dimensional drawing of BRT type fuse-links

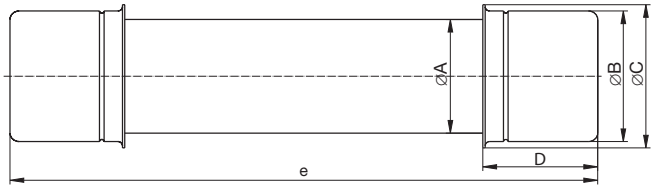

Notes:
Connections: silver-plated cooper.
Deviations of dimensions with no tolerance specified shall be within ±3%.

Fuse-link type	Dimensions [mm]				
	e	D	ØA	ØB	ØC
BRT-30	469±1,5	50	54	62	68
BRT-15	393±1,5	50	54	62	68
BRT-6	311±1,5	50	54	62	68

Voltage Transformer Fuses

Indoor - WBP Outdoor - BRT

Dimensional drawing of PBPM-6 and PBPM-10 type fuse-bases

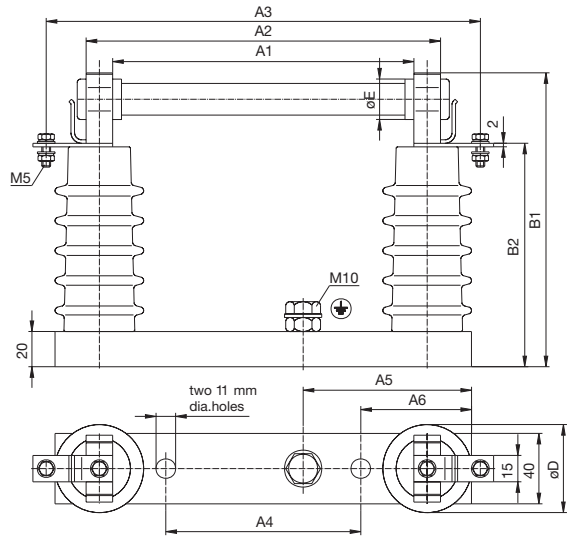

Notes:
T Earthing Terminal; tinned steel.
Connections: silver-plated brass
Contact Springs: silver-plated brass
Deviations of dimensions with no tolerance specified shall be within ±3%.

Fuse-base type	Dimensions [mm]									
	A1	A2	A3	A4	A5	A6	B1	B2	ØD	E
PBPM-6	170±2	200±2	245	110	95	62,5	165	128	50	23
PBPM-10	210±2	240±2	285	150	95	62,5	190	153	50	23

Dimensional drawing of PBPM-20 and PBPM-20 type fuse-bases

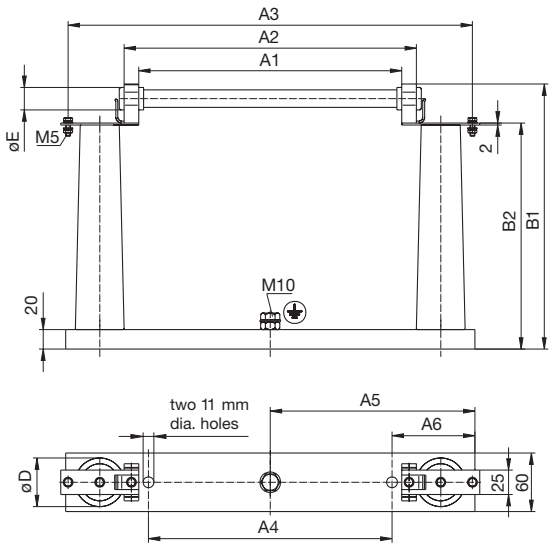

Notes:
Earthing Terminal; tinned steel.
Connections: silver-plated brass
Contact Springs: silver-plated brass
Deviations of dimensions with no tolerance specified shall be within ±3%.

Fuse-base type	Dimensions [mm]									
	A1	A2	A3	A4	A5	A6	B1	B2	ØD	E
PBPM-20	270±2	300±2	415	250	210	85	272	232	50	23
PBPM-30	345±2	375±2	490	325	247,5	85	362	322	70	23

Dimensional drawing of PBPN-24-1 and PBWMNI 36 w.II-1 type fuse-bases

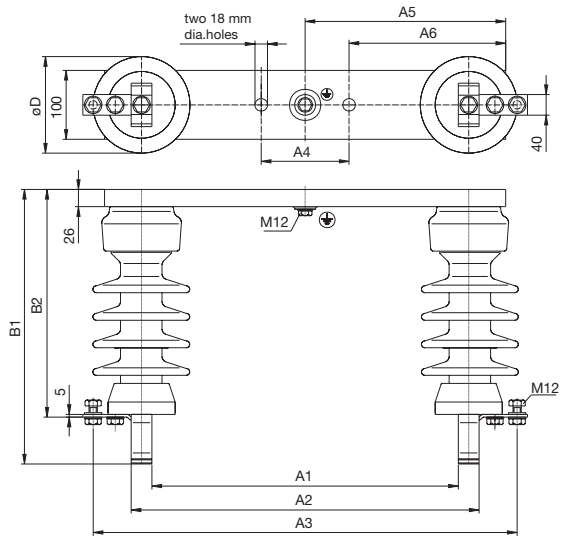

Notes:
Earthing Terminal; tinned steel.
Connections: silver-plated brass
Contact Springs: silver-plated brass
Deviations of dimensions with no tolerance specified shall be within ±3%.

Fuse-base type	Dimensions [mm]									
	A1	A2	A3	A4	A5	A6	B1	B2	ØD	E
PBPN-24-1	297±2	357±2	467	127	223	159,5	417	336	145	62
PBWMNI 36 w.II-1	375±2	435±2	545	205	263	159,5	559	476	175	62

Dimensional drawing of PBWMNIII 36 w.II-1 type fuse-bases

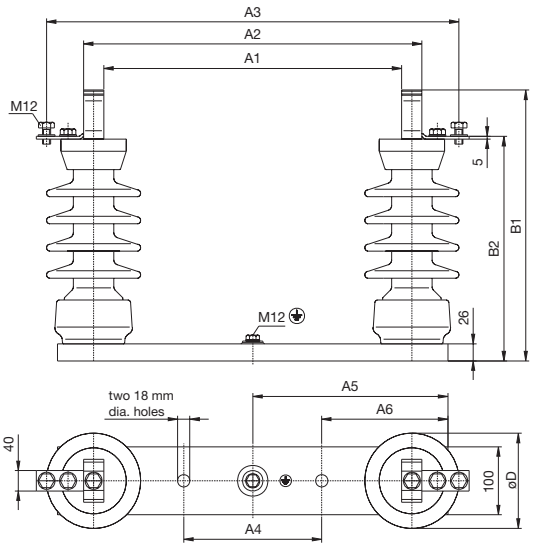

Notes:
Earthing Terminal; tinned steel.
Connections: silver-plated brass
Contact Springs: silver-plated brass
Deviations of dimensions with no tolerance specified shall be within ±3%.

Fuse-base type	Dimensions [mm]									
	A1	A2	A3	A4	A5	A6	B1	B2	ØD	E
PBWMNIII 36 w.II-1	375±2	435±2	545	205	263	159,5	559	476	175	62

Index

Indoor Railway DC Fuses

type WBT

1. FEATURES

- High rupturing capacity
- Short circuit current limiting
- Low switching voltages
- R1, P1 fire-protection grade for the materials used - in accordance with PN-84/K-02500.

2. APPLICATIONS

The fuse-links for traction applications are used to protect traction substation and electric traction rolling stock equipment against the effects of overloads greater than 2 x I and of short-circuits at voltages of 1.9 kV DC and 4 kV DC. For detailed applications of particular types of the products refer toTable 1.

3. CLIMATIC WORKING CONDITIONS

Fuse bases type PBWMI can be operated at indoor conditions at ambient temperatures of -5°C to +50°C. Other parameters are presented below. The fuse-links and fuse-boards can be operated at indoor conditions or, when enclosed in sealed boxes secured under the railway car, under the following environmental conditions:
- at ambient temperatures of -30°C to +50°C,
- at relative humidity of ambient air of 95% at a temperature of +20°C.
- 1200 m altitude

Operating in other conditions requirers approval from the manufacturer.

4. DESIGNATIONS, VERSIONS

4.1 Marking system

The marking system for particular fuse-link, fuse base or fuse-board has three alphanumerical sections as shown in the following diagram.

WBTI	-	3	/	3
Fuse-link type		Rated voltage		Rated current

TBT2	-	3	/	20
Fuse-board base type current		Rated voltage		Rated current

Note: A spring-loaded indicator for the WBTI-3, WBTG-3,WBTGI-3 fuse-links is available as an option. W-letter is to be added to the type symbol of a fuse-link if you would like to order a fuse-link fitted with an indicator.

e.g., WBTIW- / 0 - fuse-link fitted with an indicator WBTI- / 0 - fuse-link without indicator.

5. TECHNICAL DATA

The general technical data of the fuse-links are presented in Table 3. The general technical data of the fuse-boards are presented in Table 4.

6. COMPLIANCE WITH STANDARDS

The fuse-links for traction applications meet the requirements specified in Table 2.

7. HOW TO ORDER

Order by specifying the following:
- product name,
- type symbol,
- rated voltage,
- rated current,
- quantity.

All additional requirements, which are not listed in this Catalogue, should be agreed with the manufacturer.

8. ORDER EXAMPLE

1. Type WBTI-3/30 fuse-link for traction applications for rated voltage 4 kV, rated current 20 A - 20 pcs.
2. Type TBT2-3/20 fuse-board for traction applications for rated voltage 4 kV, rated current 20 A - 20 pcs.
3. Type WBTIW-3/30 fuse-link for traction applications for rated voltage 4 kV, rated current 20 A, fitted with an operation indicator - 20 pcs.

Table 1.

Fuse–link type	Fuse–base/board[1] type	Applications
WBTI-3/3 to 20	**PBWMI-6/20**	Protection against the effects of short–circuits and overloads in the electric circuits of railway traction substation equipment.
WBTI-3/25 to 50	**PBWMI-6/50**	
WBTI-3/3 to 20	**TBT2-3/20** **TBT2-3/20 & 50** **TBTS2-3/20** **TBTS2-3/20 & 50**	Protection against the effects of short–circuits and overloads in the electric circuits of traction vehicles, rail–coach space–heating equipment and electric locomotive.
WBTI-3/25 to 50	**TBT2-3/50**	
WBTG-3/3; 4; 6	**TBTG1-3/6**	Protection against the effects of short–sircuits and overloads in electric single and multi–voltage circuits of rail–coach space–heating equipment.
WBTG-3/3-I	**TBG-3/3-I**	
WBTGI-3/10; 16; 20	**PBPM-6**	Protection against the effect of short–circuits and overloads in the electric single–and multi– voltage circuits of rail–coach space–heating equipment as well as other d.c. circuits at traction vehicles. Dimensions of these fuse–links meet the requirements of German Standards DIN 43625.
WBTS-3/0,6; 1	**TBTS1-3/1**	Protection against the effects of short–circuits and overloads in the voltage measurement circuits and special electric equipment in traction vehicles, if the nominal loads are lower than 1 A.
WBT-1,5/3; 15; 40	**PBT-1,5/40**	Protection against the effects of short–circuits and overloads in the electric circuits of traction substation equipment and vehicles operating at a rated voltage not higher than 1900 V DC
WBTS-3 WBTG-3 WBTGI-3	**TBTG3-3/1; 6; 15** **TBTG4-3/1; 3; 6; 15**	A device for carrying replaceable parts in the form of types WBTS, WBTG, and WBTGI mounted outside electric circuits in electric locomotive.

[1] The specified fuse–boards and fuse–bases will operate with fuse–links selected acc.
Table 1. Other configurations should be agreed with the manufacturer.

Table 2.

Product type	Compilance with Standards
WBTI-3/3 to 50	PN–69/E–06120 in scope of environmental requirements and vibration and shock resistance. General Requirements acc. BN–70/3086–14 IEC Publ. 77 of 1968 as well as UIC 552V Sheets, VII edition
WBTG–3/3 to 6 WBTG–3/3–I	PN–69/E–06120 in scope of environmental requirements and vibration and shock resistance. General Requirements acc. BN–70/3086–14 IEC Publ. 77 of 1968 as well as UIC 552 Sheets of 1993
WBTGI–3/10 to 20	VII edition PN–69/E–06120 in scope of environmental requirements and vibration and shock resistance. DIN 43625 in scope of dimensional requirements General Requirements acc. BN–70/3086–14 IEC Publ. 77 of 1968 as well as UIC 552V Sheets,
WBTS–3/0,6; 1	PN–69/E–06120 in scope of environmental requirements and vibration and shock resistance. General Requirements acc. BN–70/3086–14 IEC Publ. 77 of 1968
WBT–1,5/3; 15; 40 PBT–1,5/40	WTO–67/ZPM Technical Requirements and AE/A10–15004

The fuse–boards for traction applications meet the requirements of the following Standards:
PN–69/E–06120 and BN–70/3086–14 and IEC Publ. 77 of 1968 in the scope specified above.

Indoor Railway DC Fuses

type WBT

Table 3. General technical data of fuse-links for traction applications

Fuse link type	Rated Voltage	Rated Current		Switching Overvolt.	Rated Breaking Current	Weight	Resistance		Fuse-base type
		ace. BN-70 3086-14	ace. UIC-552						
	U_n	I_n	I_n	U_m	I_{ws}		Min.	Max	
	kV DC	A DC	A DC	kV	kA	kg	mΩ	mΩ	
WBTI-3/3	3,750[1]	3	3,5	<12	31,5	1,5	516,6	631,4	PBWMI-6/20
WBTI-3/6		6	7				189	231	TBT2-3/20
WBTI-3/10		10	10				130,5	159,5	TBT2-3/20 & 50
WBTI-3/16		16	16				64,8	79,2	TBTS2-3/20
WBTI-3/20		20	20				41,4	50,6	TBTS2-3/20 & 50
WBTI-3/25		25	25			2,3	33,3	40,7	PBWMI-6/50
WBTI-3/32		32	32				28,8	35,2	TBT2-3/50
WBTI-3/40		40	36				20,7	25,3	TBT2-3/20 & 50
WBTI-3/50		50	48				15,8	19,25	TBTS2-3/20 & 50

Fuse link type	Rated Voltage	Rated Current		Switching Overvolt.	Rated Breaking Current	Weight	Resistance		Fuse-base type
		ace. BN-70 3086-14	ace. UIC-552						
	U_n	I_n	I_n	U_m	I_{ws}		Min.	Max	
	kV DC	A DC	A DC	kV	kA	kg	mΩ	mΩ	
WBTGI-3/10	3,750	10	10	<12	31,5	0,65	137,7	168,3	TBTG1A-3/15
WBTGI-3/16		16	16				69,3	84,7	
WBTGI-3/20		20	20				45,1	55,3	
WBTG-3/3-I	4	3	3	<12	40	0,13	569,7	696,3	PBPM-6
WBTG-3/3	4	3	3	<12	40	0,22	569,7	696,3	TBTG1-3/6
WBTG-3/4		3,5	4				459	561	
WBTG-3/6		6	6				300,6	367,4	
WBTS-3/0,6	4	0,6	-	<12	40	0,08	42(Ω)	51,3(Ω)	TBTS1-3/1
WBTS-3/1		1	-				1710	2090	
WBT-1,5/3	1,9	3	-	<6	50	0,5	234	316	PBT-1,5/40
WBT-1,5/15		15	-				28,2	38,2	
WBT-1,5/40		40	-			1.25	11,3	15,3	

*[1] Minimum breaking current Imin =1.6 x In

[1] While testing the breaking capacity satisfactory results were found for the short circuits range at a recovery voltage of 4000 V DC and for the overload currents at a recovery voltage of 3800-4000 V DC various values for particular fuse-links were obtained. 21 This is a fuse housing for fuse-links for traction applications manufactured at ABB Factory at Przasnysz. The resistance are to be measured by a electrical bridge method or technical metod using measuring instrument with accuracy class not worse than 0.5% at an ambient temperature of t = 20°C ±2°C.

Table 4. General technical data of fuse-boards

Fuse board type	Rated Voltage	Rated Current	Rated test voltage at 50 Hz	Number of poles	Weight	Fuse - link type
	U_n	I_n	U_{nl}			
	kV=	A=	kV	pcs	kg	
PBWMI-6/20	7,2	20	35[1]	1	4,9	WBTI-3/3÷20
PBWMI-6/50		40			5	WBTI-3/25÷50
TBT2-3/20	4	20	10	2	5,5	WBTI-3/3÷20 (2 pcs)
TBT2-3/20 & 50[2]		20&50			5,65	WBTI-3/3÷20 (1 pcs) WBTI-3/25÷50 (1 pcs)
TBT2-3/50		50			5,8	WBTI-3/25÷50 (2 pcs)
TBTS2-3/20		20			7,0	WBTI-3/3÷20 (2 pcs)
TBTS2-3/20 & 50		20&50		2	7,3	WBTI-3/3÷20 (1 pcs) WBTI-3/25÷50 (1 pcs)
TBTG1A-3/15		20		1	1,15	WBTGI-3/10; 16; 20
TBTG1-3/6		6			0,85	WBTG-3/3;4;6
TBTG3-3/1;6;15	-	-	-	3	1,8	WBTS-3/1 WBTG-3/3;4;6 WBTGI-3/10; 16;20
TBTG4-3/1;3;6;15	-	-	-	4	2,6	WBTS-3/1 WBTG-3/3;4;6 WBTGI-3/10; 16;20
TBTS1-3/1	4	1	10	1	0,35	WBTS-3/0,6;1
PBT-1,5/40	1,9	40	27[1] 35[3]	1	3,6	WBT-1,5/3 WBT-1,5/15 WBT-1,5/40

Note: Due to the introduction of improvements, the right is reserved to modify the products.

[1] AC contact-to-contact insulation test voltage.

[2] One pole is designed for fixing the type WBTI-3/3 to 20 fuse-link and the second one for WBTI-3/25 to 50 fuse-link.

[3] AC earth insulation test voltage.

9. APPENDICES

Fig.1 Cut-off current characteristics for fuse-link types WBTI-3...

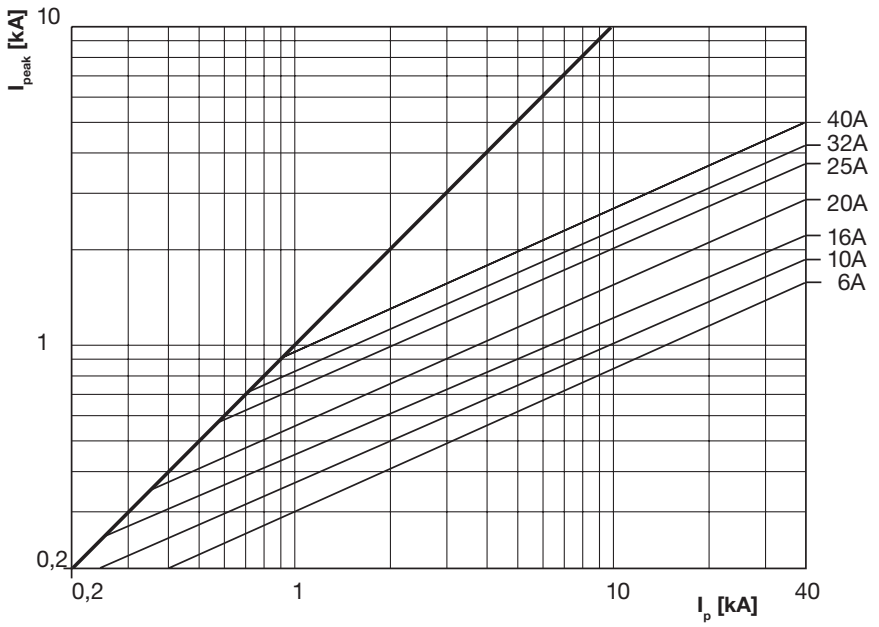

Fig. 2 Time-current characteristics for fuse-link types WBTI-3 ...

Current value deviations for any average pre-arcing period value as read from the diagram are presented within ±20%

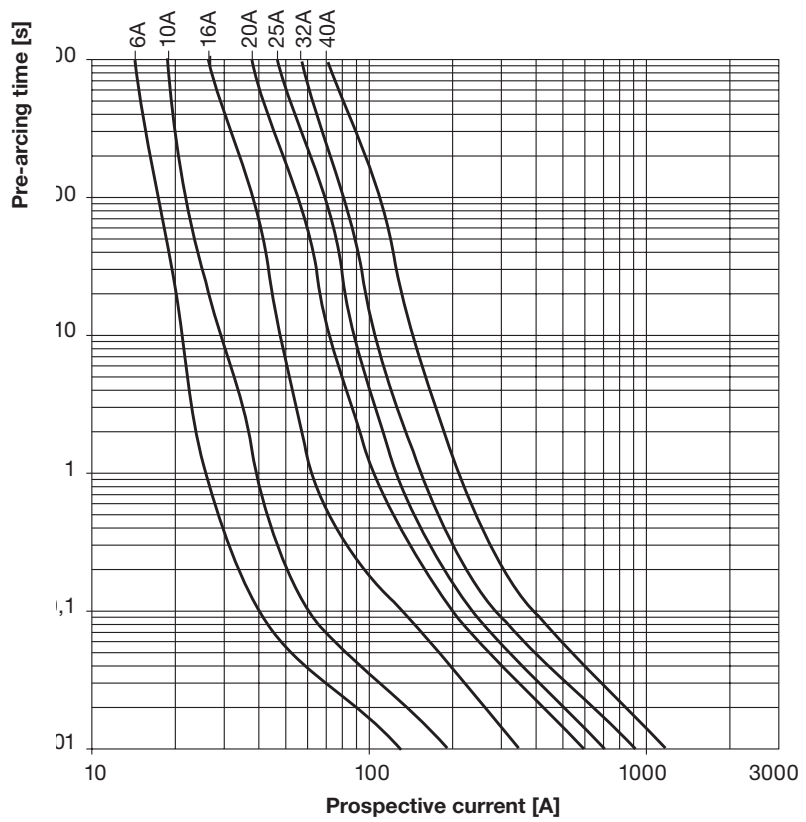

Fig. 3 Cut–off current characteristics fuse–link types WBTGI–3 ...

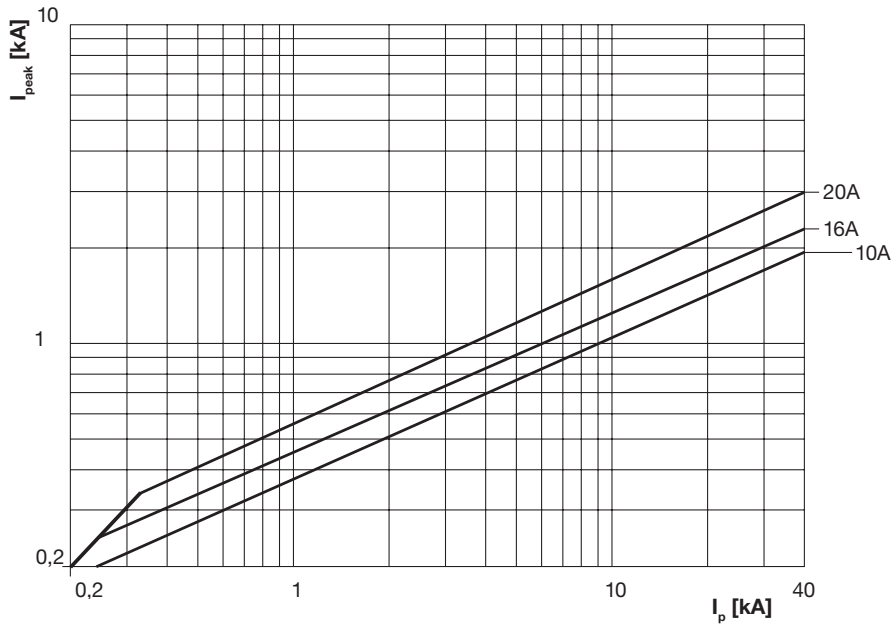

Fig. 4 Time–current characteristics for the fuse–link types WBTGI–3 ...
Current value deviations for any average pre-arcing period value as read from the diagram are presented within ±20%

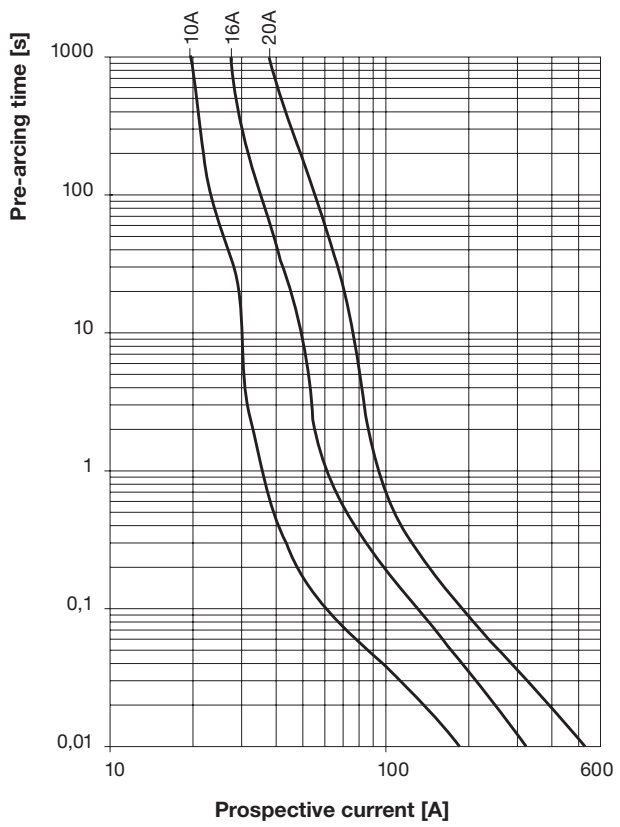

Fig. 5 Cut–off current characteristics for fuse–link types WBTG–3/3; 4; 6 ... and WBTG–3/3–I

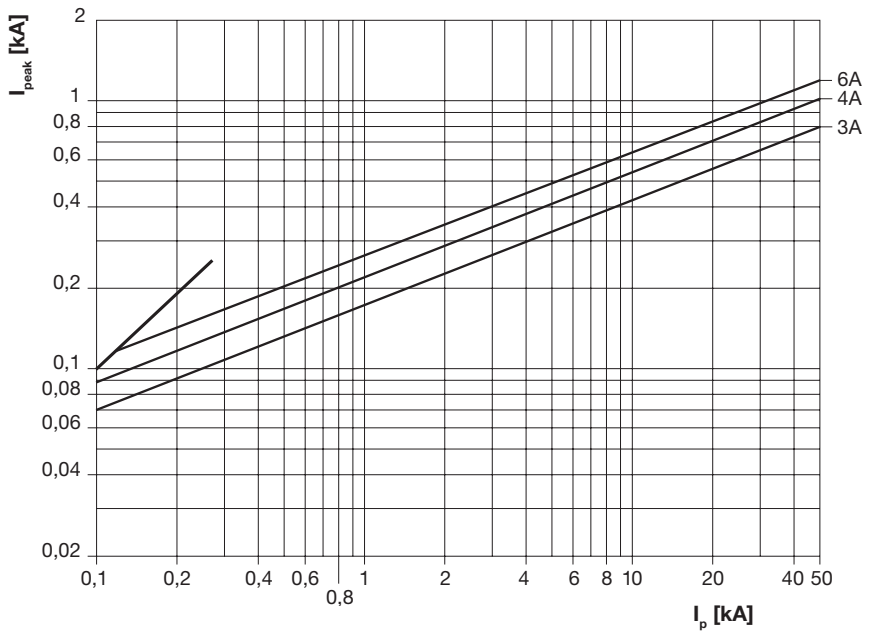

Fig. 6 Time–current characteristics for fuse–link types WBTG–3/3; 4; 6 ... and WBTG–3/3–I
Current value deviations for any average pre–arcing period value as read from the diagram are presented within ±20%.

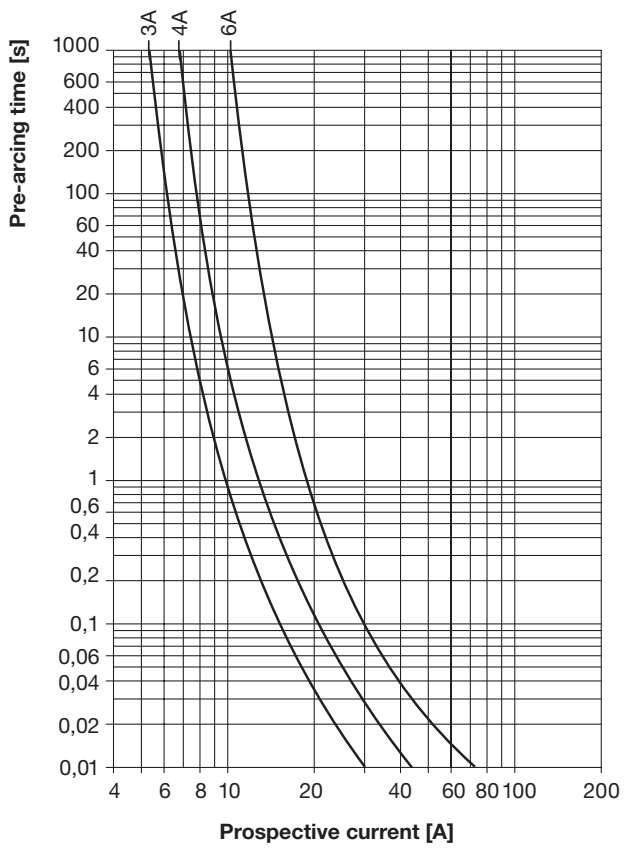

Fig. 7 Cut–off current characteristics for fuse–link types WBTS–3/0,6; 1

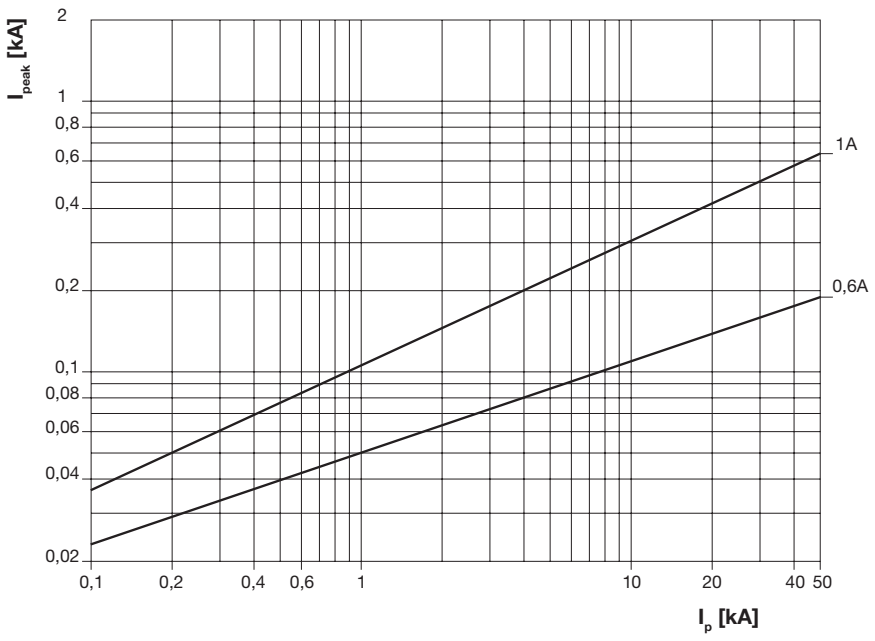

Fig. 8 Time–current characteristics for fuse–link types WBTS–3/0,6; 1

Current value deviations for any average pre–arcing period value as read from the diagram are presented within ±20%.

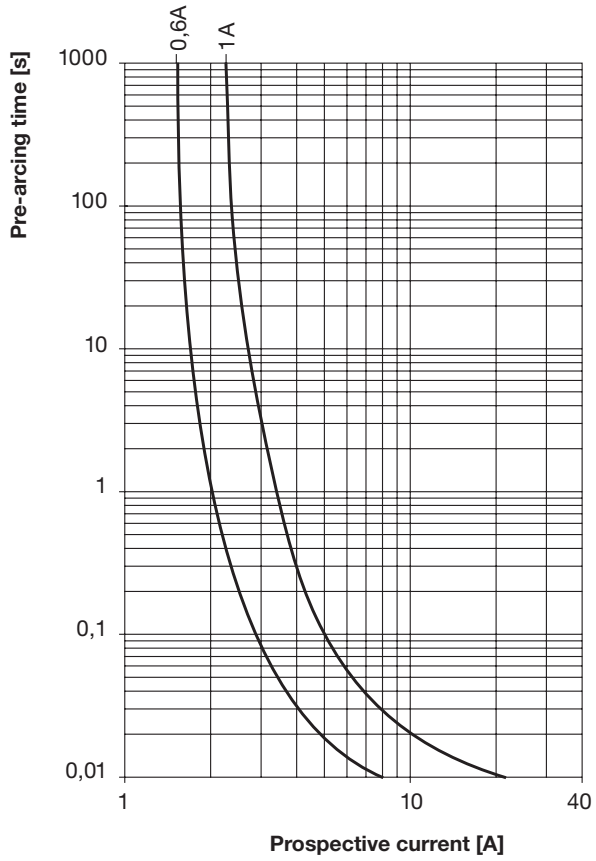

Fig. 9 Cut–off current characteristics for fuse–link types WBT–1,5/3; 15; 40

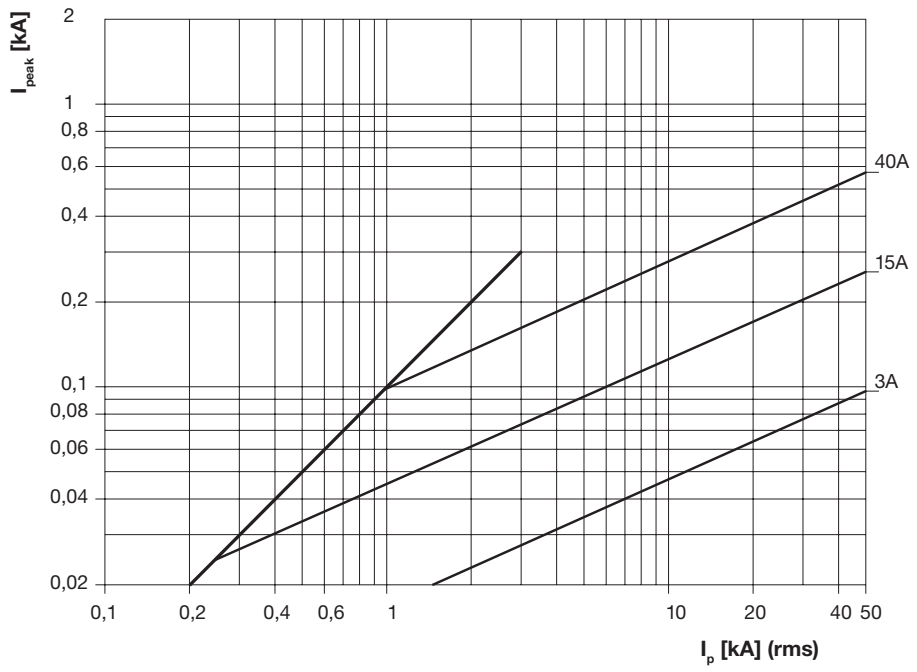

Fig. 10 Time–current characteristics for fuse–link types WBT–1,5/3; 15; 40
Current value deviations for any average pre–arcing period value as read from the diagram are presented within ±20%.

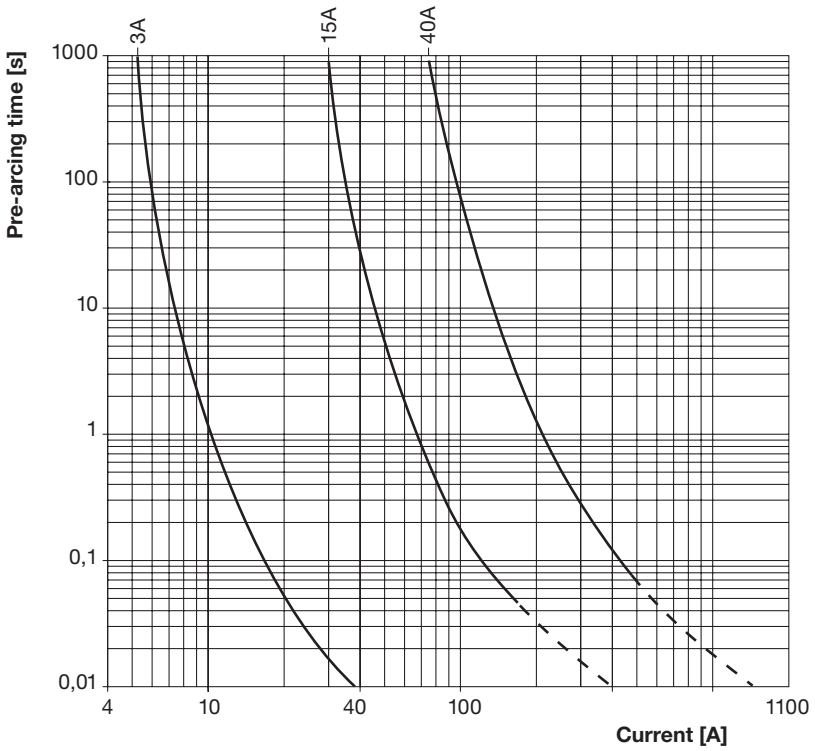

Indoor Railway DC Fuses

type WBT

WBTI–3, WBTG–3, WBTGI–3,
WBTG–3/3–I,WBTS–3 and WBT–1,5

fuse–links for traction applications

Fuse-link type	Dimensions [mm]					
	ØA	ØD	ØC	K	E	e
WBTI-3/3 to 20	55	62	66	50	20	256±2
WBTI-3/25 to 50	70	78	84			
WBTGI-3/10 to 20	38	45	50	33		256±2
WBTG-3/3-I	18	23	-	25	-	209±2
WBTG-3/3 to 6	24	28	-	20	12	200±2
WBTI-3/0.6; 1	18	23	-	25	-	145±2
WBT-1,5/3;15	38	45	50	33	-	109±2
WBT-1,5/40	65	72	-	-	-	109±2

BWT fuse–links for traction applications
DC fuse–links for railway applications, characterized by small dimensions, high rupturing capacity, current–limitation and low switching voltage. Type tested according to *'Specifica Generale per la Fornitura di Valvole Fusibili A.T. per Circuiti C.C'*. at Trenitalia (Italian Railways) testing station in Empoli/Italy.

Technical parameters:

Rated voltage	U_n	3 kV DC
Rated current	I_n	3.15; 16; 20 A
Switching voltage (max)	U_m	12 kV
Minimum breaking current	I_{min}	1.6 x I_n
Maximum breaking current	I_{ws}	60 kA

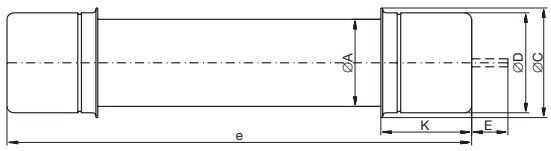

Type WBTI-3-3/...Fuse-links

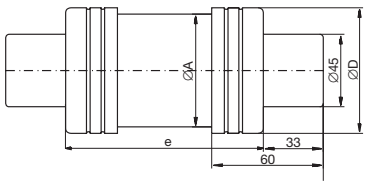

Type WBT-1,5/40 Fuselinks

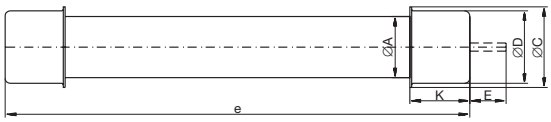

Type WBTGI-3/...; WBT-1,5/3 ... Fuse-links

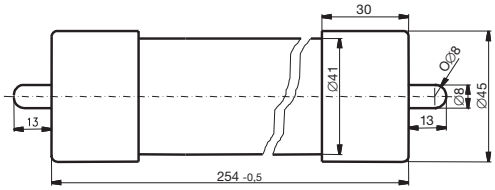

Type BWT fuse–links

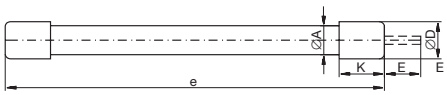

Type WBTG-3/3-6,
WBTG-3/3-I,WBTS-3/... Fuse-links

TBT2–3/...; TBT2–3/20&50; TBTS2–3/20 and TBTS2–3/20&50 fuse–boardsfor traction applications

1. Connection screw, M12, for the board type TBT2–3/50 only.
2. Connection screw – M8 for the ØD1 pole or M5 for the ØD2 pole–for the board type TBT2–3/20 & 50 only.
3. Poles designed for the fuse–links type WBT–3/20–50 fitted with extrathimble terminals.
4. Flat connections employing a screw, M8 are fitted in theTBTS2–3/... only. Connections: silver–plated brass
Contact Springs: silver–plated brass
Deviations of dimensions with no tolerance specified shall be within ±3%.

Fuse-board type	Dimensions [mm]					
	Ø A1	Ø A2	A3	B1	B2	B3
TBT2-3/20	62	62	-	136	30	-
TBT2-3/50	78	78	-	136	-	40
TBT2-3/20 & 50	78	62	-	138	40	40
TBTS2-3/20	62	62	295	138	-	-
TBTS2-3/20 & 50	62	78	295	138	-	-

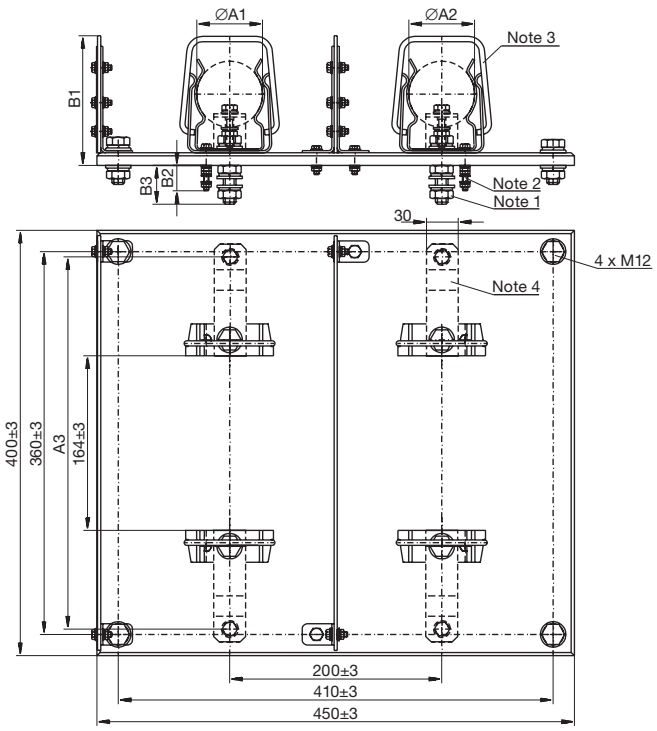

Indoor Railway DC Fuses

type WBT

TBTG3–3/1; 6; 15 and TBTG4–3/1; 3; 6; 15 fuse–boards for traction applications

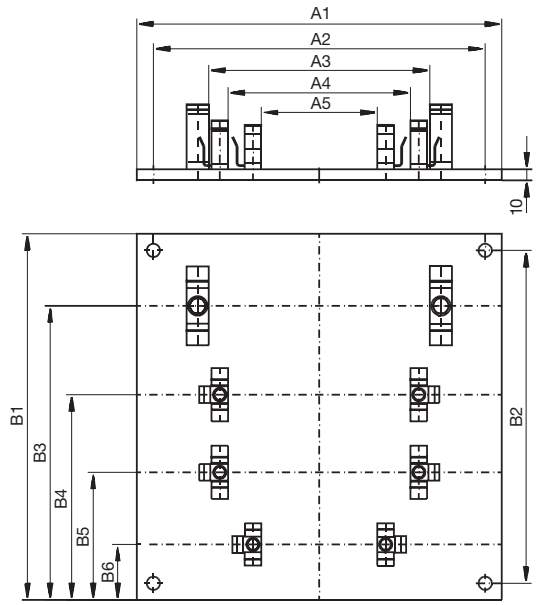

Notes:
1. Connections: silver–plated brass
2. Contact Springs: silver–plated brass
3. Deviations of dimensions with no tolerance specified shall be within ±3%.

Fuse-board type	Dimensions [mm]										
	A1	A2	A3	A4	A5	B1	B2	B3	B4	B5	B6
TBTG3-/1,6,15	330	300	220±1	180±1	120	250	220	190	110	-	40
TBT4-3/1,3,6,15	330	300	220±1	180±1	120	330	300	265	185	115	50

TBTG1–3/6; TBTG1A–3/15; TBTS1–3/1 Fuse–boards for traction applications

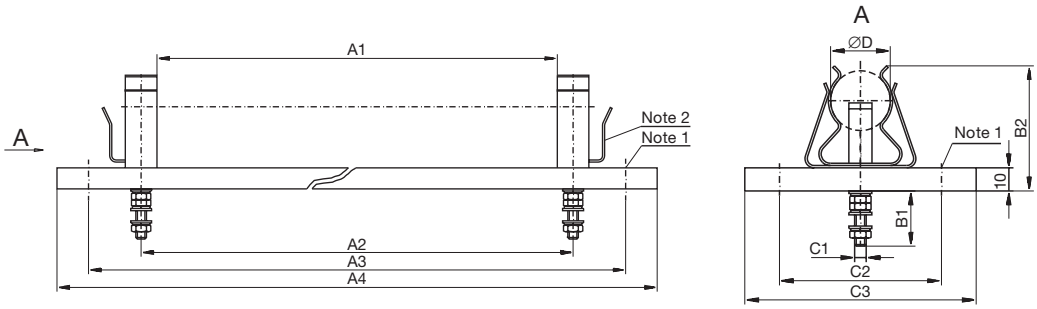

1. The Ø10 holes are to be used for instalation
2. Fuse–link stops for the Type TBTG1–3/6 and TBTS1–3/1 Fuse–board are to be installed in the panels
Connections: silver–plated brass
Contact Springs: silver–plated brass
Deviations of dimensions with no tolerance specified shall be within ±3%.

Fuse-board type	Dimensions [mm]									
	A1	A2	A3	A4	B1	B2	C1	C2	C3	C4
TBTG1-3/6	165±1,5	180±3	395±3	425	18	58±2	M5	70±2	100	28
TBTG1A-3/15	205±1,5	225±3	440±3	470	25	71±2	M8	70±2	100	45
TBTS1-3/1	105±1	120±3	394±3	425	20	60	M5	-	50	23

Type PBT-1,5/40

Fuse-base for traction application

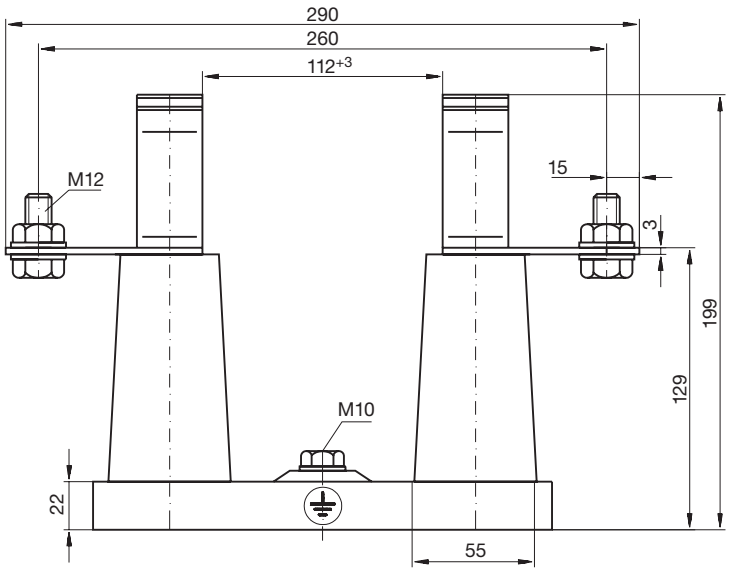

Notes:
Earthing Terminal; tinned steel.
Connectors: silver-plated brass
Contact Springs: silver-plated brass
Deviations of dimensions with no tolerance specified shall be within ±3%.
Note: Due to the introduction of improvments, the right is reserved to modify the products.

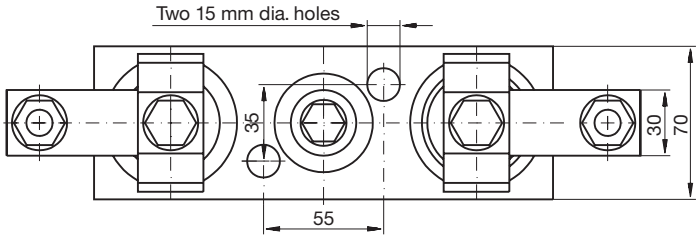

Note:
Design and specifications are subject to change without notice.

Index

Indoor Fuse Bases

Fuse links type BPS

1. FEATURES

– Suitable for all types of high power fuse links fitted with Ø45mm contact,
– May co-operate with switching station auxiliary and control circuits,
– Small overall dimensions.

2. APPLICATION

The fuse bases BPS-type are intended for fixing medium voltage fuse links fitted with a striker. The base can be applied in case of fuse links protecting transformer circuits as well as in case of fuse links protecting motor circuits. The use of these bases makes it possible to signal the fuse blow in the signalling circuits of the switching station.

3. OPERATING CONDITIONS

The fuse bases BPS-type are designed for indoor applications in temperate climate conditions.
The fuse bases BPS-type can be mounted in a vertical or horizontal position, which enables easy replacement the fuse link.

4. VERSIONS AND MARKING

Marking of the three-pole fuse base for voltage 7.2 kV is composed of two letter-digit segments: BPS-01. The two-piece base is powder painted and is fitted with a resin insulator. The base pole pitch amounts to 112 mm. The catalogue number of this base is: 1YMB507101M0001.

The table below presents the different versions of single pole BPS-type fuse bases.

Table 1

	Fuse base type	Rated volgage [kV]	Version	Coating	Post-insula-tors	Fuse link - e- dimension [mm]	Catalogue number
1	BPS	7,2	1(*)	zinc	resin	192	1YMB507102M0001
2	BPS	7,2	1(*)	zinc	resin	292	1YMB507102M0003
3	BPS	12	1(*)	zinc	resin	292	1YMB507102M0005
4	BPS	12	1(*)	zinc	porcelain	292	1YMB507102M0006
5	BPS	12	1(*)	zinc	resin	442	1YMB507102M0007
6	BPS	12	1(*)	zinc	porcelain	442	1YMB507102M0008
7	BPS	17,5	1(*)	zinc	resin	292	1YMB507102M0009
8	BPS	17,5	1(*)	zinc	porcelain	292	1YMB507102M0010
9	BPS	24	1(*)	zinc	resin	442	1YMB507102M0013
10	BPS	24	1(*)	zinc	porcelain	442	1YMB507102M0014
11	BPS	24	1(*)	zinc	resin	537	1YMB507102M0015
12	BPS	24	1(*)	zinc	porcelain	537	1YMB507102M0016
13	BPS	27	1(*)	zinc	resin	442	1YMB507102M0017
14	BPS	27	1(*)	zinc	porcelain	442	1YMB507102M0018
15	BPS	36	1(*)	zinc	resin	537	1YMB507102M0021
16	BPS	36	1(*)	zinc	porcelain	537	1YMB507102M0022
17	BPS	7,2	1(*)	powder paint	resin	192	1YMB507102M0031
18	BPS	7,2	1(*)	powder paint	resin	292	1YMB507102M0033
19	BPS	12	1(*)	powder paint	resin	292	1YMB507102M0035
20	BPS	12	1(*)	powder paint	porcelain	292	1YMB507102M0036
21	BPS	12	1(*)	powder paint	resin	442	1YMB507102M0037
22	BPS	12	1(*)	powder paint	porcelain	442	1YMB507102M0038
23	BPS	17,5	1(*)	powder paint	resin	292	1YMB507102M0039
24	BPS	17,5	1(*)	powder paint	porcelain	292	1YMB507102M0040
25	BPS	24	1(*)	powder paint	resin	442	1YMB507102M0043
26	BPS	24	1(*)	powder paint	porcelain	442	1YMB507102M0044
27	BPS	24	1(*)	powder paint	resin	537	1YMB507102M0045

	Fuse base type	Rated volgage [kV]	Version	Coating	Post-insula-tors	Fuse link - e- dimension [mm]	Catalogue number
27	BPS	24	1(*)	powder paint	resin	537	1YMB507102M0045
28	BPS	24	1(*)	powder paint	porcelain	537	1YMB507102M0046
29	BPS	27	1(*)	powder paint	resin	442	1YMB507102M0047
30	BPS	27	1(*)	powder paint	porcelain	442	1YMB507102M0048
31	BPS	36	1(*)	powder paint	resin	537	1YMB507102M0051
32	BPS	36	1(*)	powder paint	porcelain	537	1YMB507102M0052
33	BPS	7,2	2(**)	zinc	resin	any	1YMB507103M0001
34	BPS	12	2(**)	zinc	resin	any	1YMB507103M0003
35	BPS	12	2(**)	zinc	porcelain	any	1YMB507103M0004
36	BPS	24	2(**)	zinc	resin	any	1YMB507103M0007
37	BPS	24	2(**)	zinc	porcelain	any	1YMB507103M0008
38	BPS	36	2(**)	zinc	resin	any	1YMB507103M0009
39	BPS	36	2(**)	zinc	porcelain	any	1YMB507103M0010
40	BPS	7,2	2(**)	powder paint	resin	any	1YMB507103M0013
41	BPS	12	2(**)	powder paint	resin	any	1YMB507103M0015
42	BPS	12	2(**)	powder paint	porcelain	any	1YMB507103M0016
43	BPS	24	2(**)	powder paint	resin	any	1YMB507103M0019
44	BPS	24	2(**)	powder paint	porcelain	any	1YMB507103M0020
45	BPS	36	2(**)	powder paint	resin	any	1YMB507103M0021
46	BPS	36	2(**)	powder paint	porcelain	any	1YMB507103M0022

Remarks:
(*)- single pole one-piece fuse base
(**)- single pole two-piece fuse base
The single pole two-piece fuse base makes it possible to use fuse links with any „e" overall dimension.

5. DESIGN AND PRINCIPLE OF OPERATION

5.1 The three-pole fuse base

The three pole fuse base BPS-type is composed of two separated steel bars fitted with M10 earthing terminals, and three indoor resin post-insulators fixed thereon. There are spring contacts and a terminal strip, fitted with M12 screw terminals for connecting to an electrical circuit, mounted on these insulators. The insulators are separated with the use of the insulating barriers, which ensure appropriate insulation between poles. Due to the use of the barriers the overall dimensions of the fuse base could be reduced. There is a tripping mechanism fixed to one of the bars. The mechanism consists of a lever system and a microswitch, being separate for each pole. The NC contacts of the microswitches are connected in series, whereas the circuit ends are connected to the terminals 1 and 2 of the terminal strip. In case of three operating fuse links being mounted in the base, the NC contacts of the microswitches are closed and the circuit between the terminals 1 and 2 of the terminal strip has continuity. The NO contacts of the microswitches are connected in parallel, whereas the circuit ends are connected to the terminals 3 and 4 of the terminal strip. In case of three operational fuse links being mounted on the fuse base, the NO contact of the microswitches are opened and the circuit between the terminals 3 and 4 of the terminal strip has no continuity.
If any of the fuse links is missing or the striker of one of the three fuse links is triggered, the circuit between the terminals 1 and 2 will open and the circuit between the terminals 3 and 4 will simultaneously close.

5.2 The single pole fuse base

The single pole fuse bases BPS-type are manufactured in two basic versions i.e. in the form of one-piece and two-piece device. The two-piece bases consist of two steel bars fitted with M10 earthing terminals and indoor resin post-insulators fixed on these bars. There are spring contacts and the terminal strip, with M12 screw terminals for connecting to electrical circuit, mounted on these insulators. In case of the one-piece version the bars with insulators are joined with a steel bar to make a single assembly. There is a tripping mechanism fixed to one of the bars. The mechanism consists of a lever system and a microswitch. The NC contacts of the microswitch are connected to the terminals 1 and 2, whereas the NO contacts are connected to the terminals 3 and 4 of the terminal strip. In case of an operating fuse link being mounted in the base, the NC contacts of microswitch are closed, whereas the NO contacts are opened. If the fuse link is missing or the fuse link striker is triggered the microswitch NC contacts will open and the NO contacts will close.

6. CHARACTERISTICS

Table 2.

Fuse base type	Fuse base voltage	Rated	Frequency	Rated uninterrupted current	Types of suitable fuse links
		Un	f	In	
		kV	Hz	A	
BPS-01	Three-pole	7,2	50 or 60	315	BWMW-7,2/ 3,15÷100 CEF-7,2/ 6÷200 CMF - 7,2/63÷315
BPS7,2	Single pole	7,2		315	BWMW-7.2/3.15-100 CEF-7.2/6-200 CMF-7.2/63-315
BPS12	Single pole	12		200	BWMW-12/3.15-100 CEF-12/6-200 CMF-12/63-200
BPS17,5	Single pole	17,5		125	CEF-17.5/6-63
BPS 24	Single pole	24		125	BWMW-24/3.15-63 CEF-24/6-125
BPS27	Single pole	27		100	CEF-27/6-63
BPS36	Single pole	36		40	BWMW-36/3.15-40 CEF-36/6-40

Note: We reserve the right to make changes due to technological development.

7. CONFORMITY WITH STANDARDS

The BPS fuse bases meet the requirements of the following standards:
– Polish Standard PN-77/E-06110
– International Standard IEC 60 282-1

8. ORDERING METHOD

The order must contain the following information: product name, type symbol, rated voltage, catalogue number and quantity of fuse bases.
All additional requirements not stated in this catalogue sheet must be agreed with manufacturer by an inquiry made in writing and stating the source of requirements (Regulations, Standards, etc.).

9. ORDER EXAMPLE

Three pole fuse base BPS-01 type, rated voltage 7.2 kV, catalogue number 1YMB507101M0001 - 20 pcs.
Single pole one-piece fuse base with resin insulators, type BPS 12, rated voltage 12 kV, zinc plated, for fuse links with dimension e=292 mm, catalogue number 1YMB507102M0005, 10 pcs.

10. ENCLOSURES

1. Dimensioned drawings

Single pole one-piece fuse base

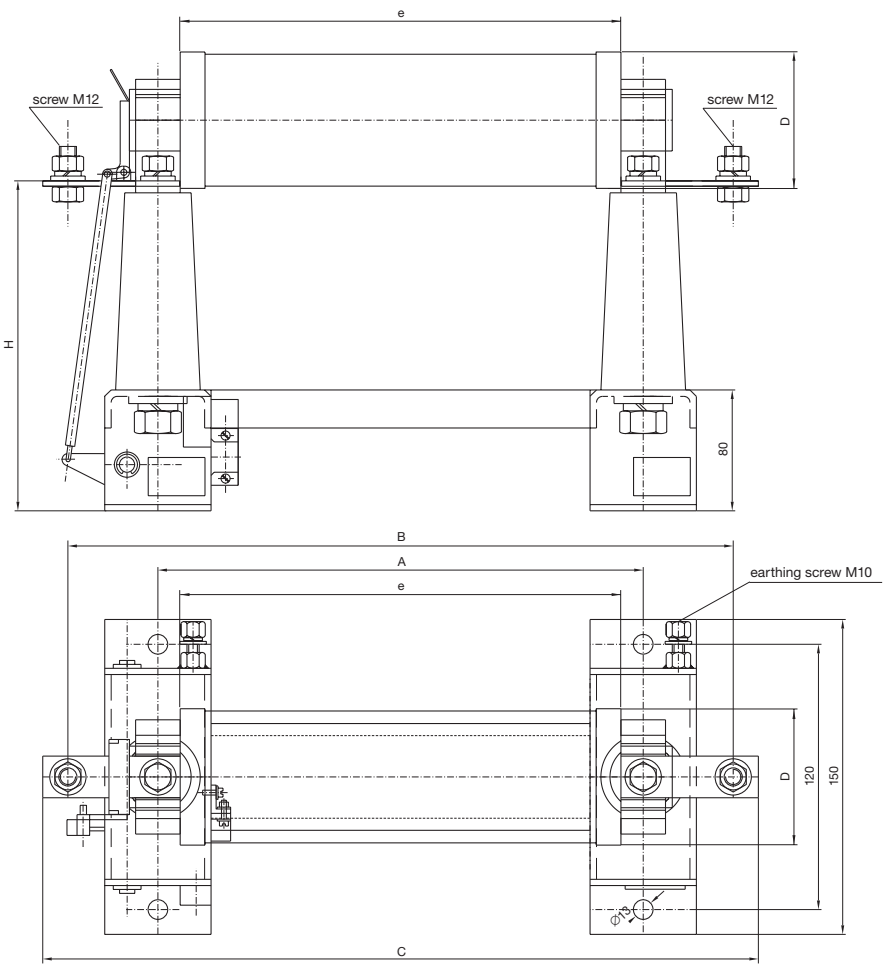

Dimensions					
Un	Fuse link dimension	A	B	C	H
kV	e/D	[mm]	[mm]	[mm]	[mm]
7,2	192/Ø53, 192/Ø65, 192/Ø87	226+2	346+2	376+2	192±1(z)
	292/Ø53, 292/Ø65, 292/Ø87	326+2	446+2	476+2	
12	292/Ø53, 292/Ø65, 292/Ø87	326+2	446+2	476+2	217±1(z)
	442/Ø53, 442/Ø65, 442/Ø87	476+2	596+2	626+2	218±1(p)
17,5	292/Ø53, 292/Ø65, 292/Ø87	326+2	446+2	476+2	297±1(z) 312±1(p)
24	442/Ø53, 442/Ø65, 442/Ø87	476+2	596+2	626+2	297±1(z)
	537/Ø65, 537/Ø87	571+2	691+2	721+2	312±1(p)
27	442/Ø65, 442/Ø87	476+2	596+2	626+2	388±1(z) 389±1(p)
36	537/Ø65, 537/Ø87	571+2	691+2	721+2	388±1(z) 389±1(p)

Indoor Fuse Bases

Fuse links type BPS

Single pole two-piece fuse base

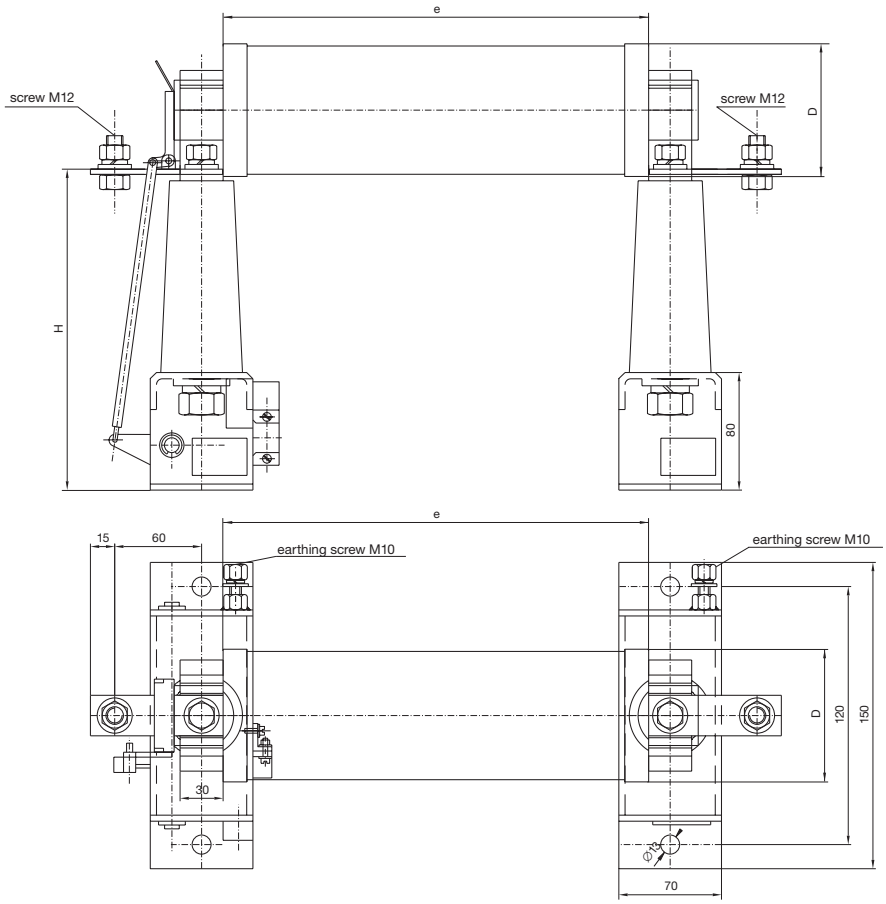

Dimensions		
Un	Fuse link dimension	H
[kV]	e/D	[mm]
7,2	192/Ø53, 192/Ø65, 192/Ø87	192±1(z)
	292/Ø53, 292/Ø65, 292/Ø87, 367/Ø87	
12	192/Ø53, 292/Ø53, 292/Ø65, 292/Ø87	217±1(z)
	442/Ø53, 442/Ø65, 442/Ø87, 537/Ø65, 537/Ø87	218±1(p)
24	442/Ø53, 442/Ø65, 442/Ø87, 292/Ø53	297±1(z)
	537/Ø53, 537/Ø87	312±1(p)
36	537/Ø53, 537/Ø87	388±1(z) 389±1(p)

2. Wiring diagrams of auxiliary circuits of the fuse bases.

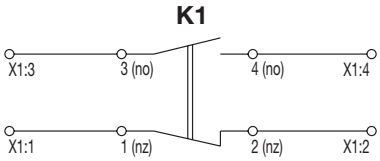

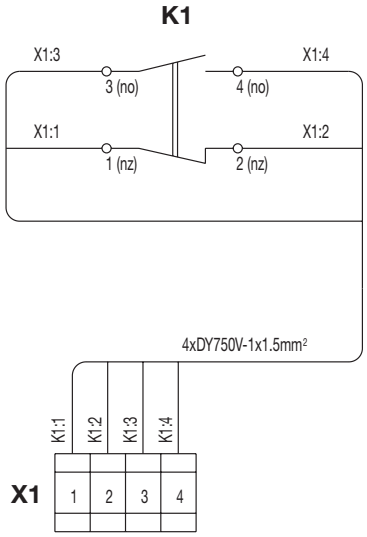

NOTES for single pole BPS

1. Contacts 1-2 of one of the auxiliary switches K1 are open and contacts 3-4 are closed:
   a) after fuse link striker has triggered,
   b) in case of fuse link missing in the fuse holder.
2. Contacts 1-2 of the auxiliary switches K1 are closed, and contacts 3-4 are opened when a fuse links in the fuse holder are operational.
3. Use fuse links with striker only.
4. Install fuse links with striker in the fuse holder in the manner that the striker will be directed to the insulator with pull insulator.
5. K 1: type 83135, Ui = 380 V; Ue = 380 V, Ie = 6A, AC15; Ue = 220 V, Ie = 0.25A, DC13
6. X1: type LZ-B4/6, Ui = 500 V; 4mm² Cu, IEC 947-7-1

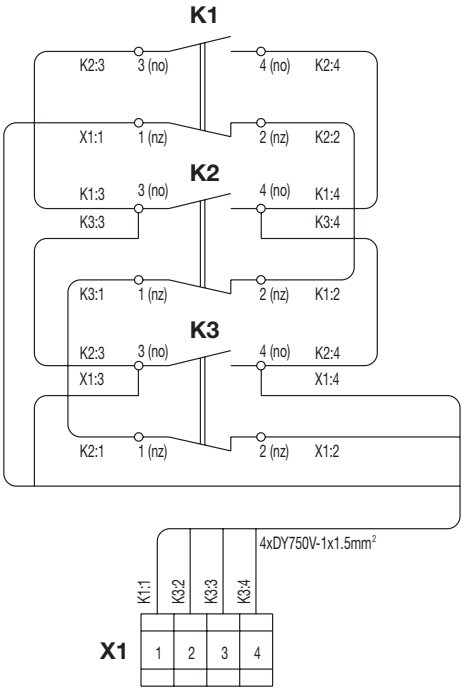

NOTES for three poles BPS

1. Contacts 1-2 of one of the auxiliary switches K1, K2, K3 are open and contacts 3-4 are closed:
   a) after fuse link striker has triggered,
   b) in case of fuse link missing in the fuse holder.
2. Contacts 1-2 of the auxiliary switches K1, K2, K3 are closed, and contacts 3-4 are opened when all three fuse link in the fuse holder is operational.
3. Use fuse links with striker only.
4. Install fuse links with striker in the fuse holder in the manner that the striker will be directed to the insulator with pull insulator.
5. K1: type 83135, Ui = 380 V; Ue = 380 V, Ie = 6A, AC15; Ue = 220 V, Ie = 0.25A, DC13
6. X1: type LZ-B4/6, Ui = 500 V; 4mm² Cu, IEC 947-7-1

ABB Sp. z o.o.
Branch in Przasnysz
ul. Leszno 59
06-300 Przasnysz, Poland
Phone: (+48 22) 51 52 838, 51 52 831
(+48 29) 75 33 233, 75 33 240
Fax: +48 22 51 52, +48 29 75 33 27
e-mail: export.plzwa@pl.abb.com

www.abb.com