Single or double service branch connector

MECHANICAL CONNECTORS

HEPWORTH

US6, US7 & US8 Connectors

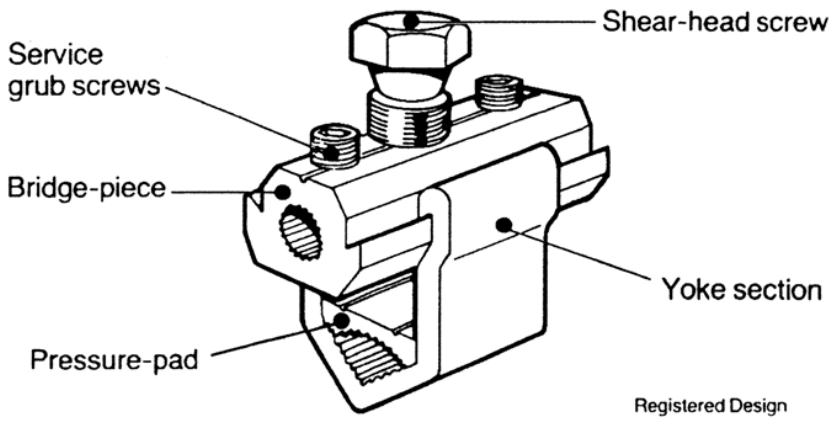

Principle Application

Service connections to stranded sector-shaped mains conductors in the following metric and imperial ranges: -

Range

Connector reference	Mains 4-core				Service Max* (mm²)	Approx. Unit Wt. (gms)
	Metric (mm²)		Imperial (sq. ins)			
	min.	max.	min.	max.		
US6	50	95	0.10	0.15	35	65
US7	95	185	0.15	0.30	35	85
US8	185	300	0.30	0.50	35	120

*NOTE: For small conductors see technical data overleaf.

This range of Hepworth mechanical connectors is designed for connecting solid circular aluminium and stranded copper service cables (to ESI 09-7) to stranded, paper insulated lead sheathed mains cables (to BS 6480). It is particularly suitable for connecting metric service cables to existing mains cables in imperial sizes, in the ranges given above. The connectors may be used on both copper and aluminium cables.

Each connectoris supplied in a sealed pack together with fitting instructions, details of which appear with the technical data overleaf.

Secondary Applications

These connectors are also suitable for circular mains conductors to BS 6360 (copper) and BS 6791 (aluminum) in the following ranges: -

Connector reference	Circular Conductors	
	min.	max.
US6	35	70
US7	95	150
US8	185	240

Single or double service branch connector

MECHANICAL CONNECTORS

US6, US7 & US8 Connectors

Physical Dimensions

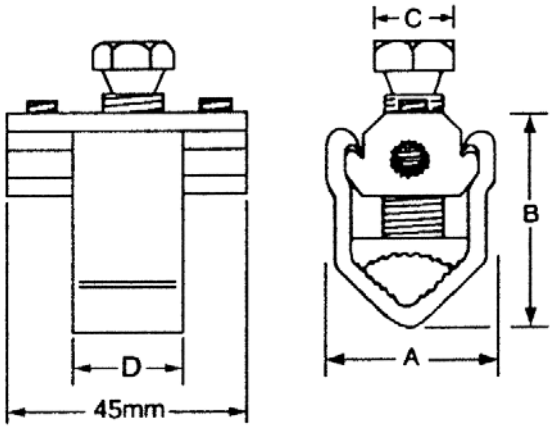

Ref. Code	Dimensions (mm)			
	A	B	C	D
US6	27.2	35.8	13.0	25
US7	33.23	45.4	17.0	30
US8	40.2	50.4	17.0	30

Material

HE 30 TF Aluminium Alloy.

Fitting Instructions

Open the mains cable cores sufficiently to allow a yoke section to be fitted around each conductor and strip the insulation equal to the length of the yoke section pIus 5 mm. Thoroughly abrade the exposed conductor and assemble the connector around the core, tightening the mains screw just sufficiently to secure the assembly, checking that the bridge piece and pressure pad are centrally located.

Cut the service cable(s) to length and strip 15 mm of insulation from the end. Thoroughly abrade the conductor and fit into the cable entry in the bridge piece. Tighten the grub screws using a 5/32" or 4 mm A/F hexagon drive. Finally tighten the mains screw until the head shears, where necessary holding the body of the connector to prevent twisting.

Stranded service conductors below 16 mm2 should be doubled and if necessary re-doubled to achieve a satisfactory cross-sectional area. Where either mains or service conductors are copper, they should be wrapped in brass gauze to improve the electrical stability of the interface connection.

The US6 and US7 connectors are suitable for use with 3 and 4 core stranded conductors with pressure pads and 3 and 4 core solid conductors without pressure pads.

SICAME ELECTRICAL DEVELOPMENTS
A Groupe Sicame Company

©COPYRIGHT
Sicame Electrical Developments Ltd operates a continuous product design development and improvement programme and offers active co-operation establishing satisfactory procedures and systems to meet new or unusual jointing situations. The company reserves the right to introduce modifications to the above designs and specifications without prior notice.