Enclosure Type Stainless Steel EZE 62

Increased Safety Exe
Dual Certified ATEX/IECEx

EZE Stainless Steel Enclosures

Registered Design.®

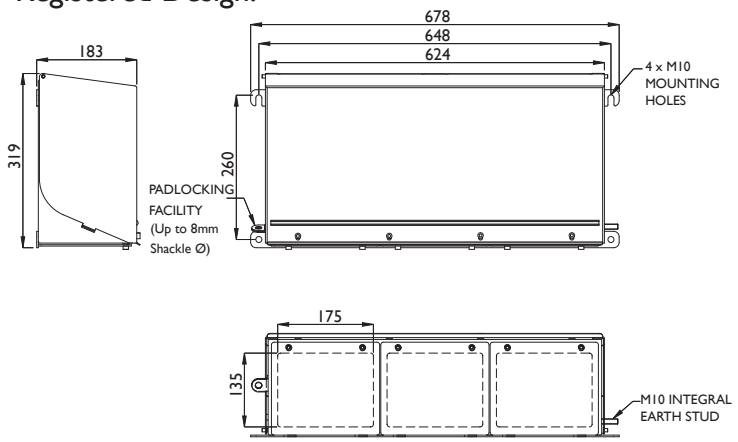

All Dimensions in mm.

Technical Data

- Increased Safety Exe. Ⓔx II 2 GD Exe II.
- EZE 62 Certificate No. Baseefa 08 ATEX 0364X & IECEx BAS 08.0125X
- ZEZE-62 (Empty) Certificate No. Baseefa 08 ATEX 0363U & IECEx BAS 08.0124U
- Suitable for use in Zone 1, Zone 2, Zone 21 & Zone 22.
- Construction and test standards IEC/EN 60079-0, IEC/EN 60079-7, IEC/EN 61241-0 and IEC/EN 61241-1.
- IP66 ingress protection to IEC/EN 60529.
- DTS01 deluge protection.
- Operating temperature range -40°C to +80°C.
- Temperature Class and Ambient T6 40°C. Optional T5 with ambients up to 65°C.
- Assembly instruction data sheet No. A.I. 280. For EZE 62.
- Assembly instruction data sheet No. A.I. 281. For EZE Z62.

MAXIMUM QUANTITY OF ENTRIES

Thread Size	M16	M20/Os & O	M20/A	M25	M32	M40	M50
Bottom Face Quantity	60	60	42(36*)	27(24*)	18	12	6

* Recommended maximum for cable gland installation.

TERMINAL CAPACITY DATA

Terminal Type	Conductor Size (mm²)		Max. Volts	Typical Terminal Arrangements							
				3 Vertical Rail (Max. Physical)		3 Vertical Rail (Max. Current)		4 Vertical Rail (Max. Physical)		5 Vertical Rail (Max. Physical)	
	Min.	Max.		Terminal Quantity	Amps	Terminal Quantity	Amps	Terminal Quantity	Amps	Terminal Quantity	Amps
WDU 2.5N	0.5	2.5	420	114	6	19	17	152	6	190	5
WDU 2.5	0.5	2.5	550	114	6	19	17	152	6	190	5
WDU 4	0.5	4	690	96	9	17	22	128	8	160	7
WDU 6	0.5	6	550	72	13	14	29	96	13	120	10
WDU 10	1.5	10	550	57	19	12	40	-	-	-	-
WDU 16	1.5	16	690	48	25	10	53	-	-	-	-
WDU 35	2.5	35	690	36	42	8	87	-	-	-	-

Information in the table above is based on the maximum conductor size permitted for the terminal.
If earth terminals are required, the quantity should be taken from the maximum physical terminal quantity.

Notes: A combination of different sized entries is possible, please contact Hawke for more information.
The table above gives an indication of potential terminal arrangements. Please contact Hawke for information on other arrangements or empty enclosures.
A combination of different sized terminals is possible, please contact Hawke for more information.
Other terminal types are available.