HIGH VOLTAGE CATALOG

July 2012

THORNE & DERRICK UK

Tel: +44 (0)191 490 1547
Fax: +44 (0)191 477 5371
Email: northernsales@thorneandderrick.co.uk
Website: www.cablejoints.co.uk
www.thorneanderrick.co.uk

Edition July 2012 – Illustrations non contractual

SIBILLE INDUSTRIE
DIVISION ESP
ELECTRIC SAFETY PRODUCTS

The SIBILLE INDUSTRIE GROUP ESP division is a manufacturer of electrical safety equipment.

Our products are intended for technicians and teams who build, maintain and operate power systems in a high-risk environment (low, medium and high voltage).

The goals aspired to by our group since its creation are to:

- Protect individuals against electrical risks
- Provide products ensuring maximum security
- Develop risk prevention among those working within the industry

ESP focuses on innovation in order to provide solutions adapted to evolving global technological networks and thereby effectively optimizes power distribution and management.

OUR VALUES

- Customer satisfaction by providing innovative, quality products
- 100% of our factories are in France
- Employee satisfaction through a respectful and participative management system

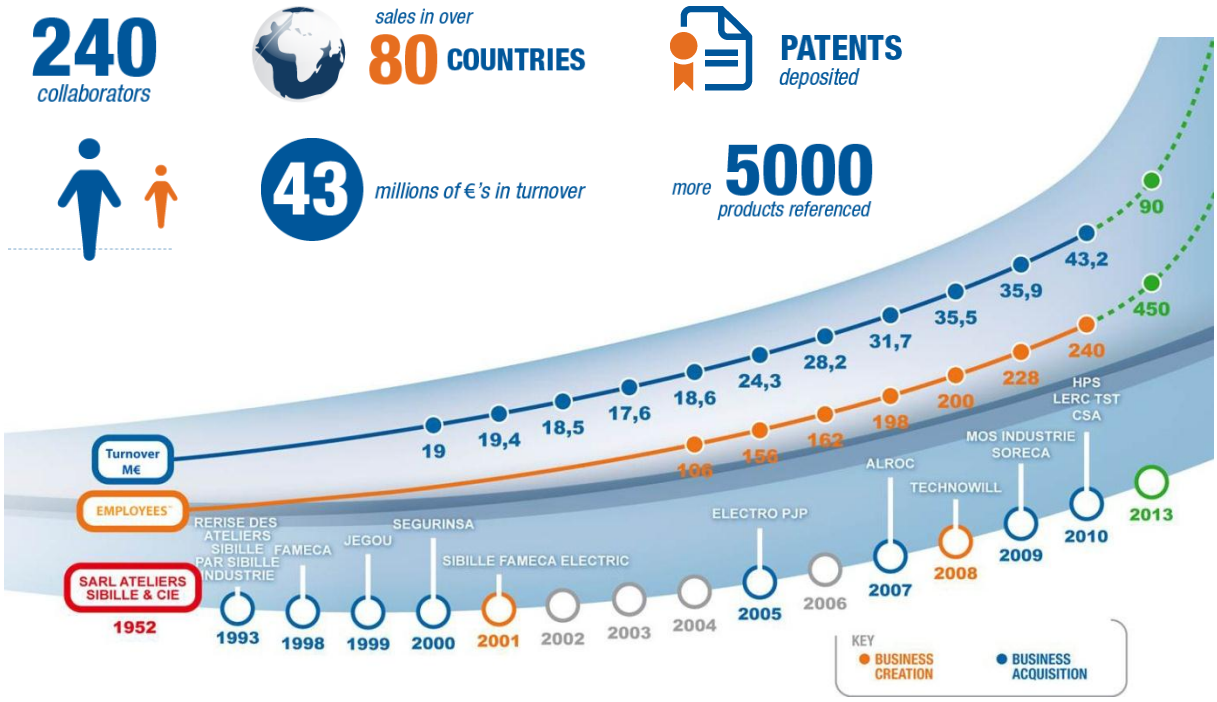

Made in France

Our brands

SIBILLE OUTILLAGE · TECHNOWILL · CSA PRODUCTION · MOS industrie · Soreca · FAMECA · ALROC · SIBILLE SAFE · electro-PJP.com · HPS HYDRAULIC PRES' SERVICES · LERC.TST

Established in 1940, ALROC has become as of the late 1980's one of the worldwide leading companies specialized in the fabrication of cable preparation tools and machines to prepare:

- Electrical cables (low, medium and high voltage)
- Optic fiber and telecommunication cables
- Coaxial and special cables

As of December 2007, ALROC is now part of the group SIBILLE INDUSTRIE and has exported its products to more than 50 countries to date.

ALROC is equipped with the best high-tech machines tools and data processing systems to design and to manufacture its products.

Consequently, ALROC offers customized design to meet specific customer requirements.

Technical Support

Beyond the technical hotline, ALROC is also equipped with an audiovisual system to offer live visual assistance with our users.

In addition to the above, ALROC also offers training sessions on site with a view on training in the handling of the tools.

Fondée en 1940, la société ALROC, a su se positionner comme le leader mondial depuis la fin des années 1980 dans la fabrication des outils et machines pour la préparation des câbles :

- Electriques (basse, moyenne et haute tensions)
- Fibres optiques et téléphoniques
- Coaxiaux et spéciaux

ALROC a rejoint le groupe SIBILLE INDUSTRIE depuis décembre 2007, et a exporté ses produits dans plus de 50 pays à ce jour.

La société ALROC s'est dotée des moyens technologiques et informatiques les plus performants pour concevoir (C.A.O., F.A.O. G.P.A.O.), fabriquer ses produits (centres d'usinage et tours à commande numérique, injection plastique).

De cette manière, ALROC apporte des réponses sur mesure aux besoins spécifiques de sa clientèle.

Support Technique

Au-delà du support téléphonique, ALROC est aussi dotée d'un système audiovisuel afin d'offrir un support technique en direct auprès de vos collaborateurs.

ALROC est aussi en mesure d'offrir une formation prise en main dans ses locaux.

Fonderie
Foundry shop

Bureau d'étude
Engineering department

Injection plastique
Plastic injection

Montage
Assembly line

Centres d'usinage à commande numérique
Machine tool shop

Tour à commande numérique
Machine tool shop

INDEX

OUTER JACKET 7

Single cut (reinforced & alarmed) for outer jacket - DMSR..... 9

Jacket spreader - EGA 11

Lead spreader - EVP EV HTB 12

Cable handler - CAS 13

Double cut for outer jacket - DM25-60-DC..... 14

Single cut for outer jacket - DM..... 15

Single cut (alarmed) for outer jacket - DMS 16

Semi-conductor remover on outer jacket - AUG5/60-160 17

SEMI-CONDUCTOR 19

See also multifunctions tools CAMF5, CMF4, CMF5, AML and C/PP

LHS 21

Restore cylindrical shape - ASR..... 22

Restore cylindrical shape with superiror finition - ASR/F 23

INSULATION 25

See also multifunctions tools CAMF5, CMF4, CMF5, AML and C/PP

LH 27

CHANNEL & CONE ON INSULATION 29

Cone on insulation **NO SILICONE** - CHN - NS 31

Cone finishing - TC 32

Channel - LHP 33

Channel **NO SILICONE** - LHP5 NS 34

Choice of blades for LHP tools 35

MULTIFUNCTIONS (SEMI-CONDUCTOR + INSULATION) 39

SUPER FINITION + NO SILICONE - CAMF5/55-160-NS 41

NO SILICONE - CMF4/60-110-NS CMF5/100-160-NS 42

K7/FSC (pour MF4/60-110-NS et MF5/100-160-NS) 43

ASI/40-80 44

GRI-RTE 45

MOTORIZED MULTIFUNCTIONS (SEMI-CONDUCTOR + INSULATION) 47

AML 49

Blade add-on to remove insulation - K7i/ 50

Electrical sander - C/PP 51

CABLE CLAMP 53

For Ø >50mm, cable clamp for all HTB ALROC tools - BMFD/50-160 54

SAV 55

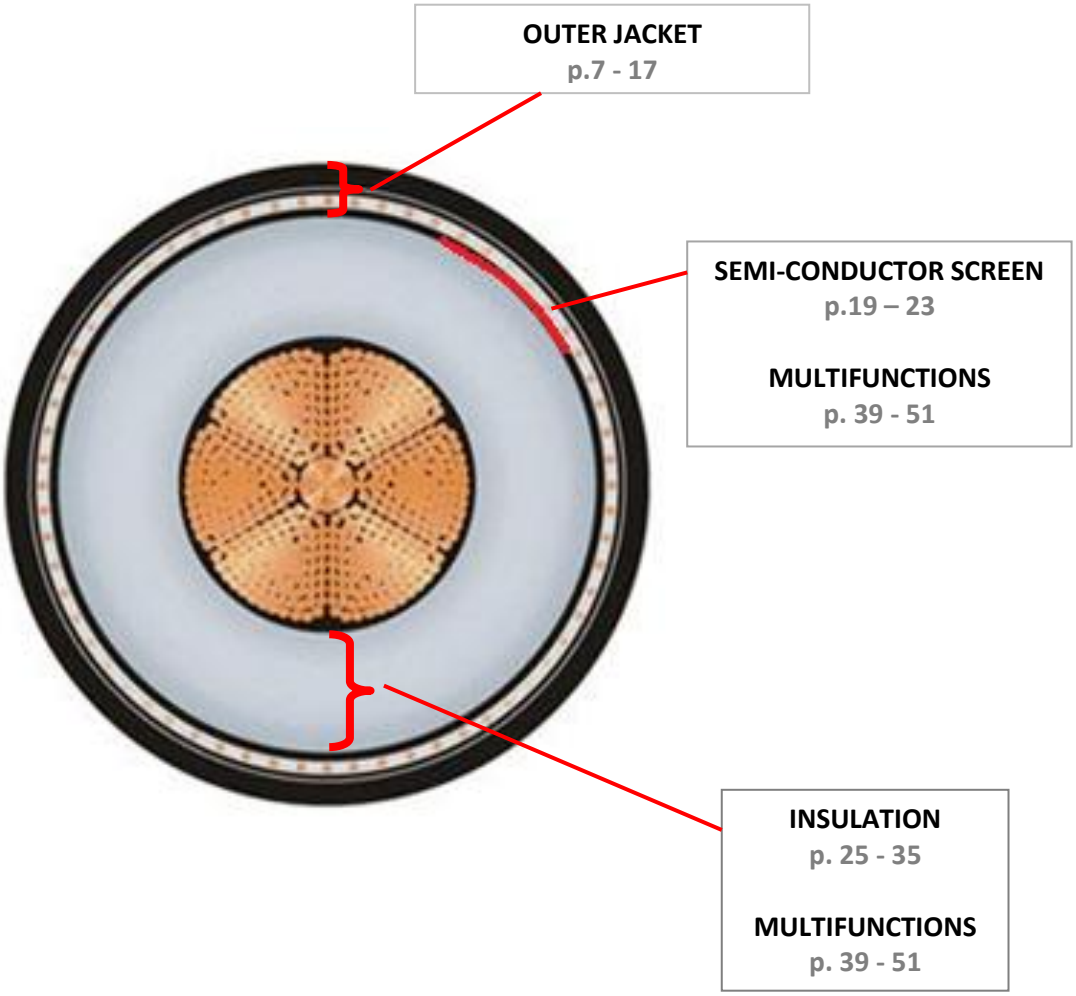
OUTER JACKET
p.7 - 17
SEMI-CONDUCTOR SCREEN
p.19 – 23
MULTIFUNCTIONS
p. 39 - 51
INSULATION
p. 25 - 35
MULTIFUNCTIONS
p. 39 - 51

OUTER JACKET

Product range overview

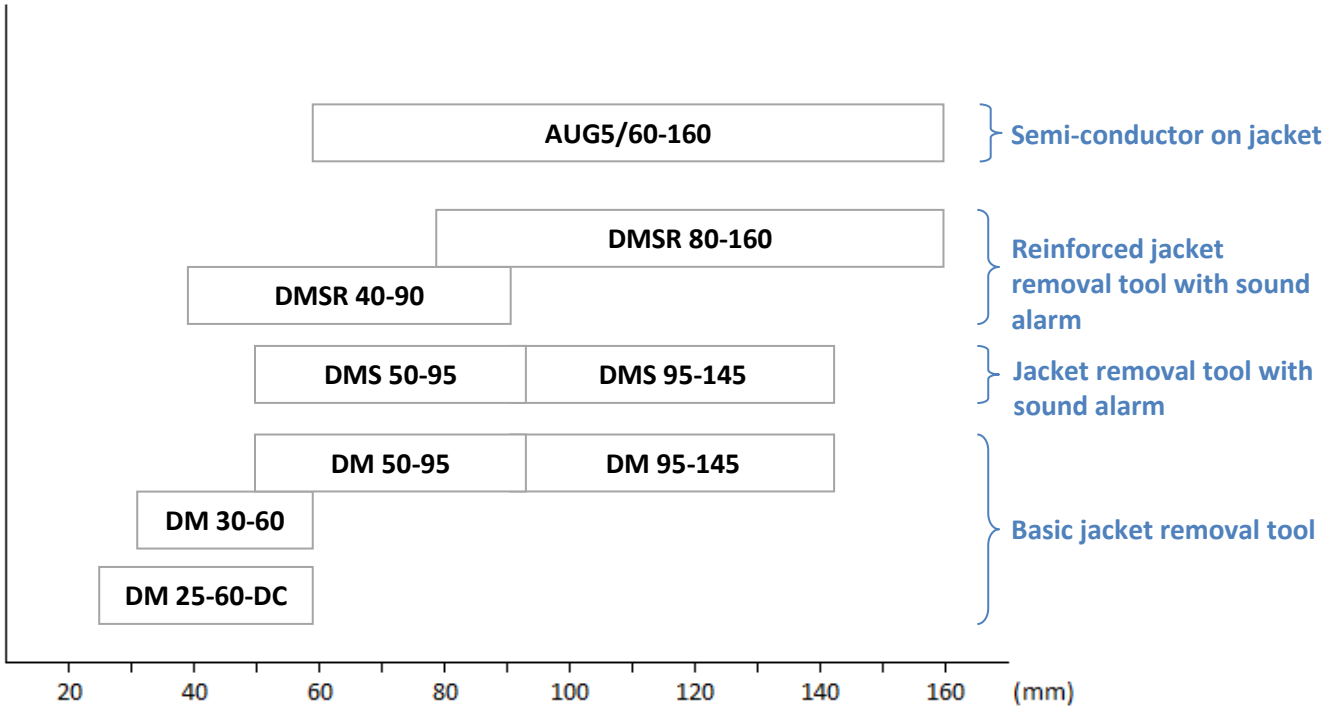

Used with

BMFD 50-160

Optional

EGA / EVP / EV HTB / CAS

HV – Outer Jacket
DMSR

D
M
S
R

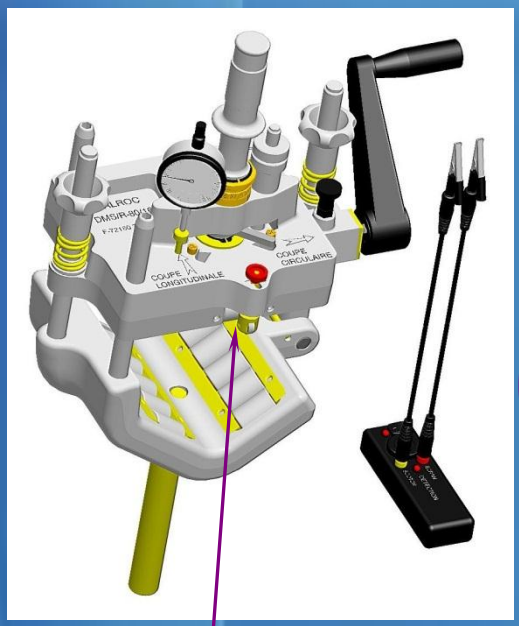

☞ New steel reinforced position indicator for circular & longitudinal cut

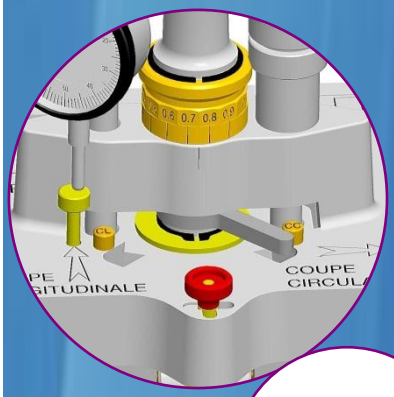

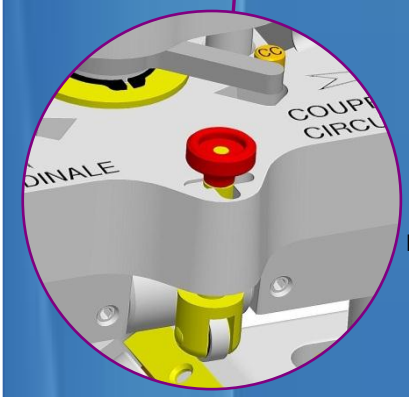

☞ Incorporated detection system rolls on an adhesive aluminium tape

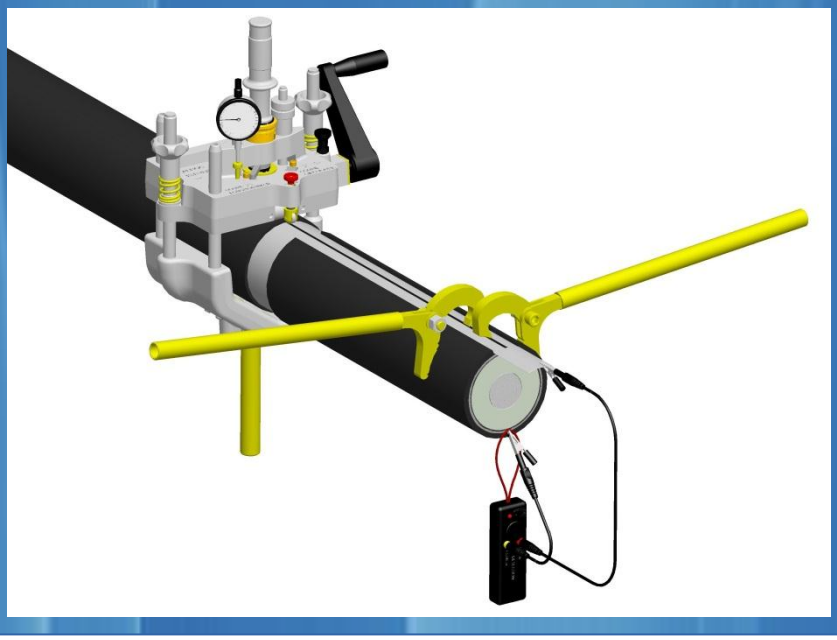

ALROC

Z.I de la fonderie
72160 Tuffé
FRANCE

Tel:
+33 (0)2 43 71 11 80
Fax:
+33 (0)2 43 71 16 51

www.alroc.fr
commercial@alroc.fr

HV – Outer Jacket
DMSR

D
M
S
R

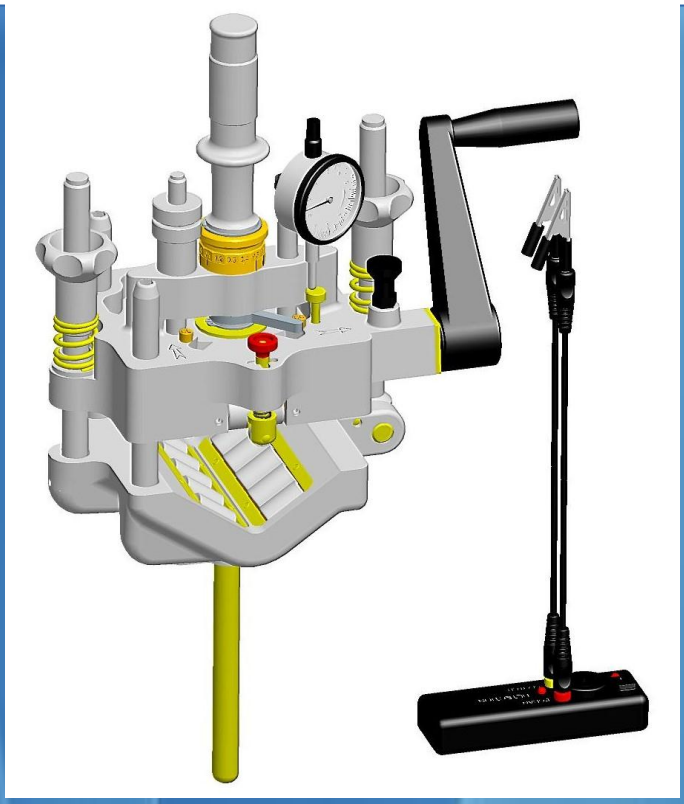

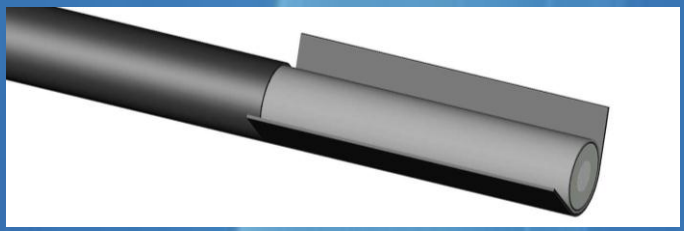

FUNCTIONS	CHARACTERISTICS
The DMSR 40/90 is specially designed to remove the HDPE outer sheath also lead sheath of every thickness on high voltage cables. The DMS/R is very solid to remove heavy outer sheath. A comparator allow a precise cutting of the alu or lead. .sheath.	☞ Removes the outer jacket ☞ Change of longitudinal to circular cutting without loosing tool from the cable. ☞ Comparator for a precise cutting L : 370 mm Weight : 7.7kg l : 155 mm

Réf :	Cable diameter capacity	Max cutting depth	Dimension	Weight
DMSR/40-90	40 - 90mm	11mm	370 x 155mm	7,7kg
DMSR/80-160	80 - 160mm	11mm	400 x 160mm	10,5kg

ALROC
Z.I de la fonderie
72160 Tuffé
FRANCE

Tel:
+33 (0)2 43 71 11 80
Fax:
+33 (0)2 43 71 16 51

www.alroc.fr
commercial@alroc.fr

HV – Outer Jacket
EGA

E
G
A

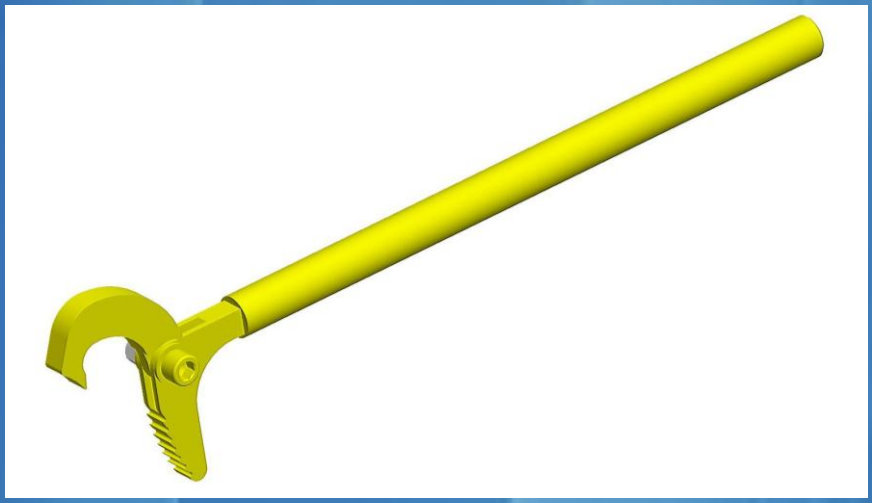

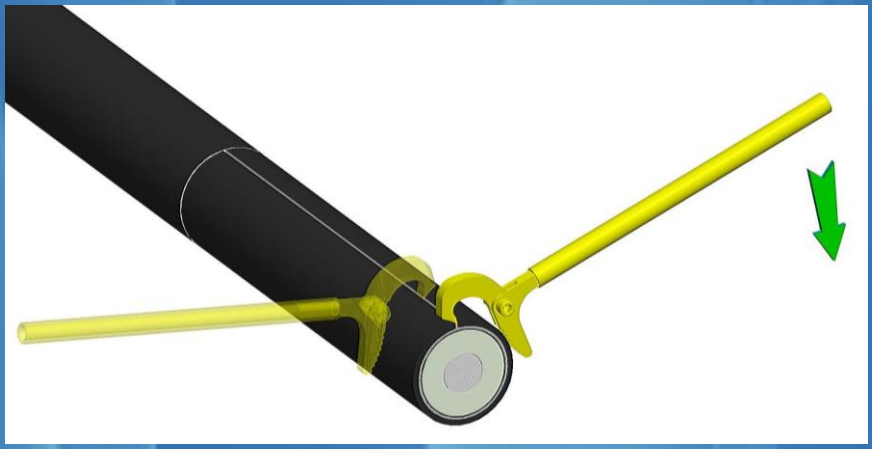

FUNCTIONS	CHARACTERISTICS
EGA tool allows to spread and to remove the outer sheath from HV cables after realization of longitudinal and circular cut.	Outer sheath spreading from HV cables. Note : for more facility, spread the outer sheath using a pair of EGA. L : 430 mm Weight : 1,2 kg l : 120 mm H : 40 mm

Z.I de la fonderie
72160 Tuffé
FRANCE

Tel:
+33 (0)2 43 71 11 80
Fax:
+33 (0)2 43 71 16 51

www.alroc.fr
commercial@alroc.fr

HV – Lead Outer Jacket
EVP EV HTB

E

V

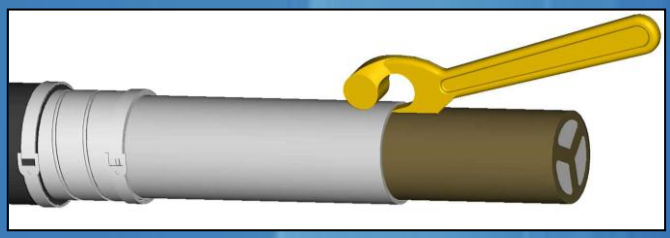

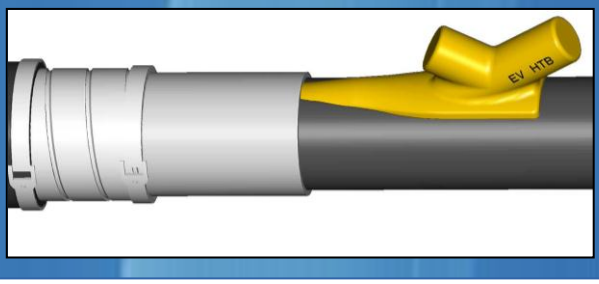

FUNCTIONS	CHARACTERISTICS
EVP and EV-HTB spreaders facilitate the lead spreading in regards to the semi-conductive sheet.	Lead sheath spreading EVP for LV and MV cables EV-HTB for HV cables

Z.I de la fonderie
72160 Tuffé
FRANCE

Tel:
+33 (0)2 43 71 11 80
Fax:
+33 (0)2 43 71 16 51

www.alroc.fr
commercial@alroc.fr

HV – Outer Jacket
CAS

C
A
S

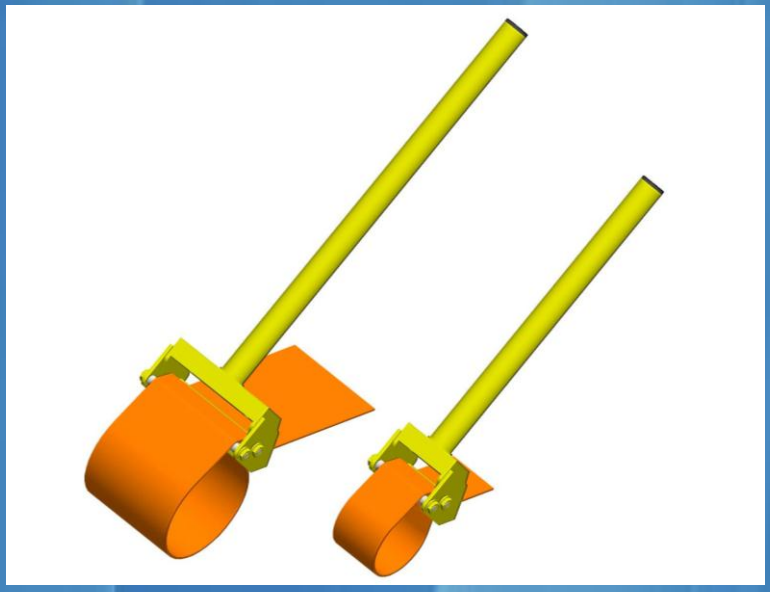

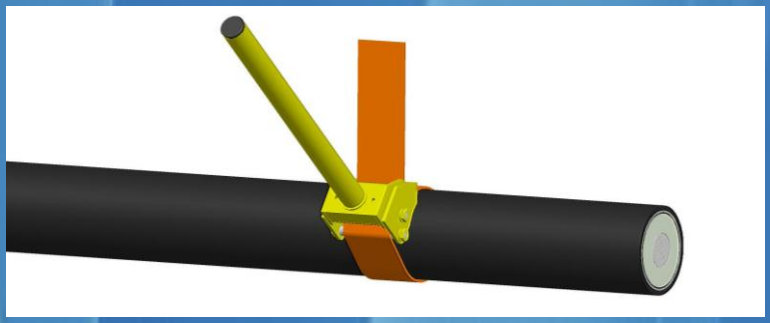

FUNCTIONS	CHARACTERISTICS
The key strap CAS can handle HV cables without damaging them.	☞ Handling cables

Ref :	Width of strap	Lenght of the handle	Weight
CAS/1	75 mm	450 mm	3 kg
CAS/2	150 mm	600 mm	4.5 kg

ALROC
Z.I de la fonderie
72160 Tuffé
FRANCE

Tel:
+33 (0)2 43 71 11 80
Fax:
+33 (0)2 43 71 16 51

www.alroc.fr
commercial@alroc.fr

HV – Outer Jacket
DM25-60-DC

D
M
25-
60-
DC

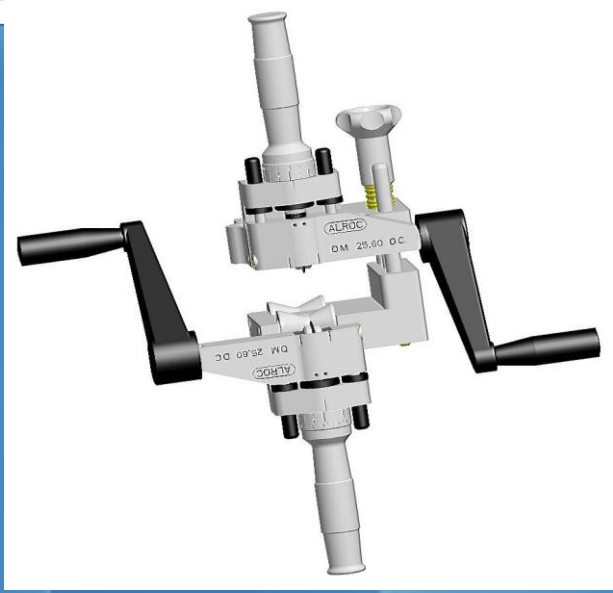

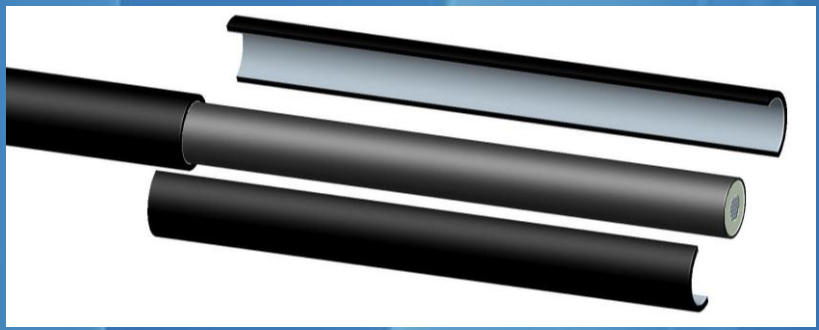

FUNCTIONS	CHARACTERISTICS
The DM25/60 tool is designed to realize a longitudinal cut to remove HDPE outer jackets as well as lead sheath. Application example : Outer sheath control on drum in factory.	☞ Circular and longitudinal cutting on cable's outer sheath. ☞ Sold in plastic case ☞ Capacity : Ø25 - 60mm ☞ maximum cutting depth: 7mm L : 500 mm Weight: 6.7kg l : 300 mm H : 220 mm

ALROC
Z.I de la fonderie
72160 Tuffé
FRANCE

Tel:
+33 (0)2 43 71 11 80
Fax:
+33 (0)2 43 71 16 51

www.alroc.fr
commercial@alroc.fr

HV – Outer Jacket
DM

D

M

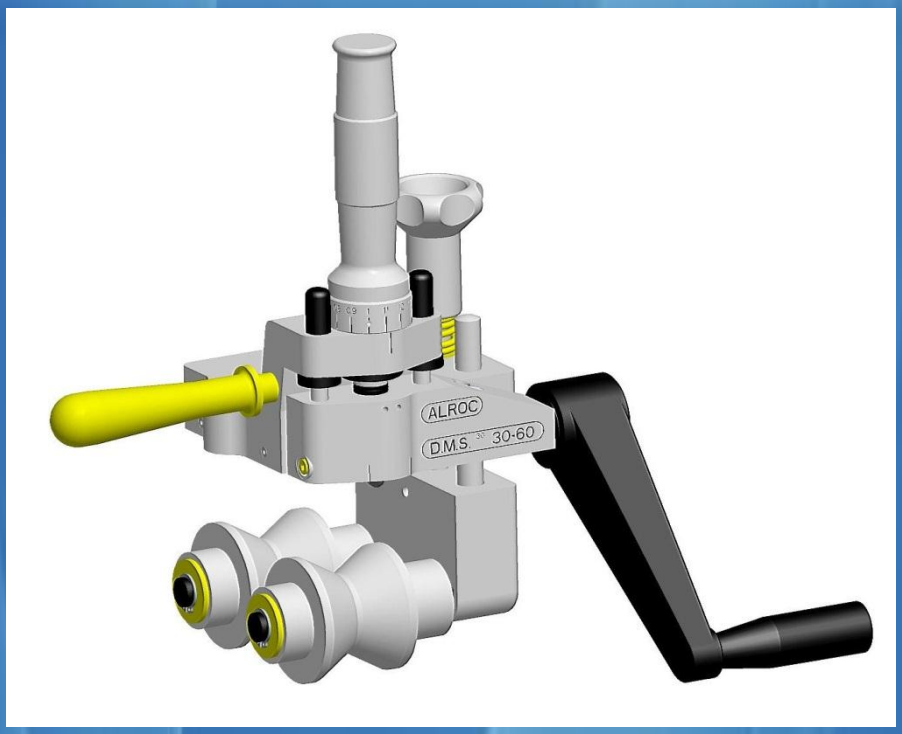

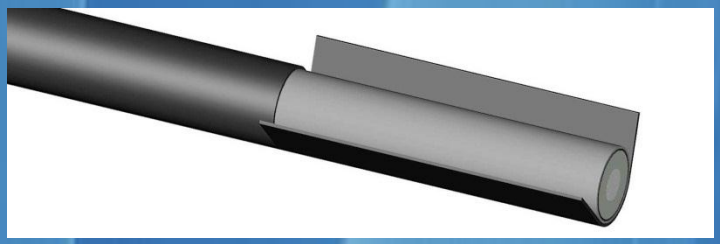

FUNCTIONS	CHARACTERISTICS
The DM is designed to remove PEHD or lead o of variable thickness from high voltage cables.	Removes outer sheath from high voltage cables Supplied with plastic case

Cable diameter	Max thickness	Ref :	Weight
30 - 60 mm	7 mm	DM 30-60	4.1 kg
50 - 95 mm	7 mm	DM 50-95	4.3 kg
95 - 145 mm	11 mm	DM 95-145	5.0 kg

ALROC
Z.I de la fonderie
72160 Tuffé
FRANCE

Tel:
+33 (0)2 43 71 11 80
Fax:
+33 (0)2 43 71 16 51

www.alroc.fr
commercial@alroc.fr

HV – Outer Jacket
DMS

D
M
S

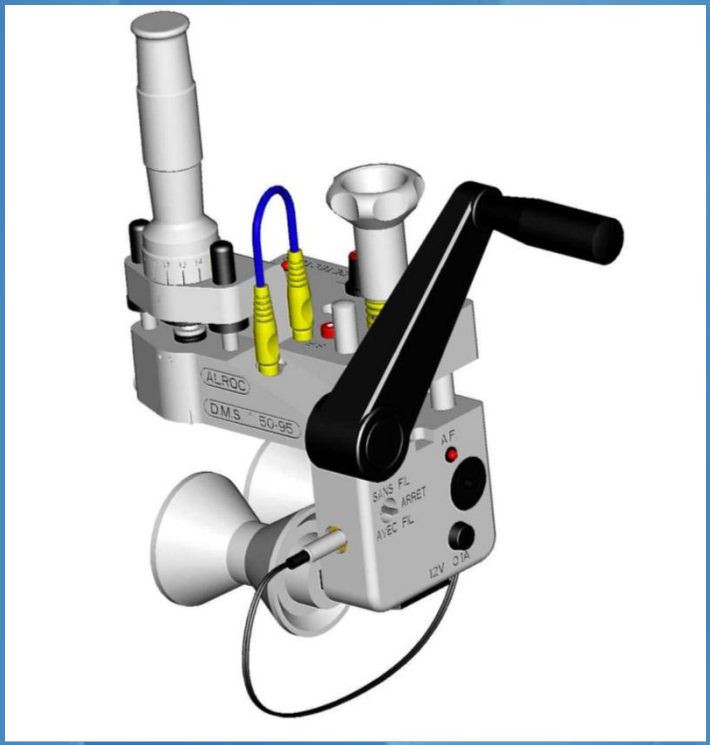

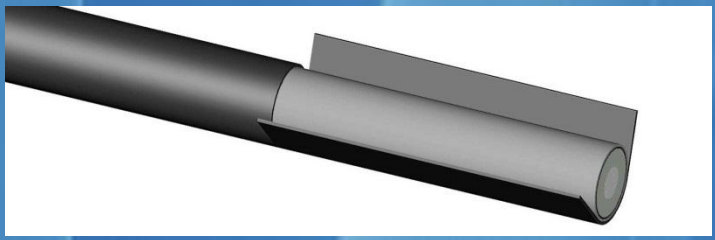

FUNCTIONS	CHARACTERISTICS
The DMS is designed to remove polyethylene jackets of variable thickness from high voltage cables. The incorporated sound alarm system warns when the blade is in contact with the lead/ aluminium shield.	Removes outer sheath from high voltage cables Audible sound indication when metallic shield is reached Supplied with plastic case

Cable diameter	Max thickness	Ref :	Weight
50 - 95 mm	7 mm	DMS 50-95	4 kg
95 - 145 mm	11 mm	DMS 95-145	5 kg

ALROC
Z.I de la fonderie
72160 Tuffé
FRANCE

Tel:
+33 (0)2 43 71 11 80
Fax:
+33 (0)2 43 71 16 51

www.alroc.fr
commercial@alroc.fr

HV – Outer Jacket
AUG5/60-160

A
U
G
5
/
60-
160

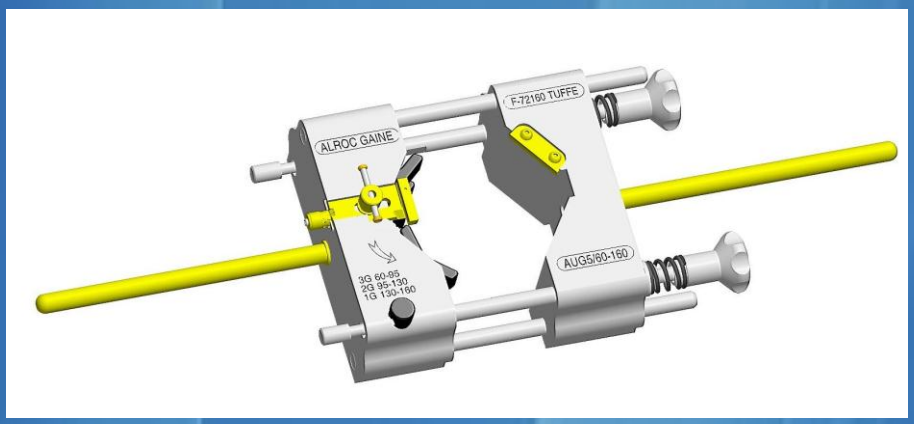

FUNCTIONS	CHARACTERISTICS
The AUG5/60-160 tool can be used for peeling the bonded semi-conductor for cable preparations.	Removing outer sheath Minimal peeling thickness: 2mm Capacity: 60 - 160mm Ø L : 640 mm Weight : 8.6 kg l : 226 mm H : 113 mm

ALROC

Z.I de la fonderie
72160 Tuffé
FRANCE

Tel:
+33 (0)2 43 71 11 80
Fax:
+33 (0)2 43 71 16 51

www.alroc.fr
commercial@alroc.fr

SEMI-CONDUCTOR SCREEN

Product range overview

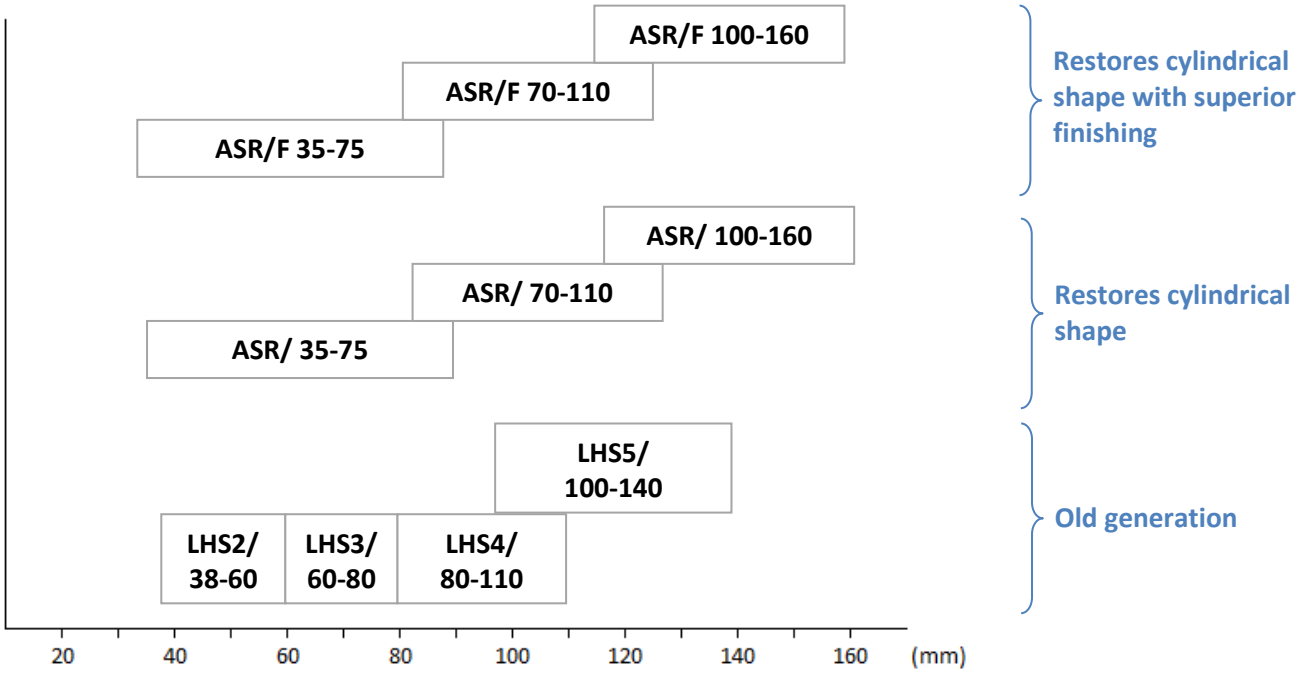

Used with

BMFD 50-160

HV – BONDED SEMI-CONDUCTOR
LHS

L
H
S

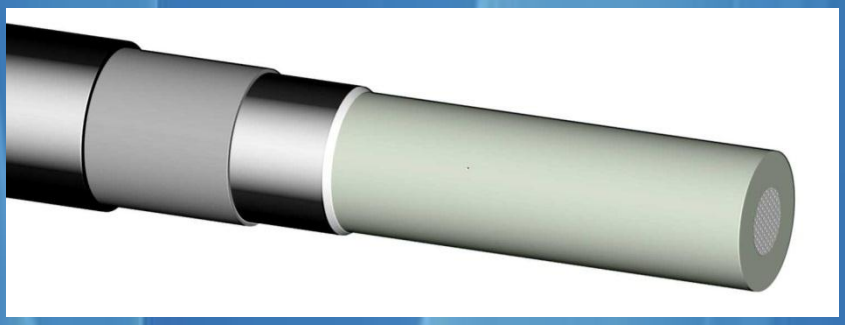

FUNCTIONS	CHARACTERISTICS
LH tools remove Bonded semi-conductor leaving a correct finishing on the insulation.	Bonded semi-conductor screen removal

Semi-conductor diameter	Ref :	Weight
38 - 60 mm	LHS2	2 kg
60 - 80 mm	LHS3	3 kg
80 - 110 mm	LHS4	4,5 kg
100 - 140 mm	LHS5	6,5 kg

ALROC
Z.I de la fonderie
72160 Tuffé
FRANCE

Tel:
+33 (0)2 43 71 11 80
Fax:
+33 (0)2 43 71 16 51

www.alroc.fr
commercial@alroc.fr

HV – BONDED SEMI-CONDUCTOR
ASR

A
S
R

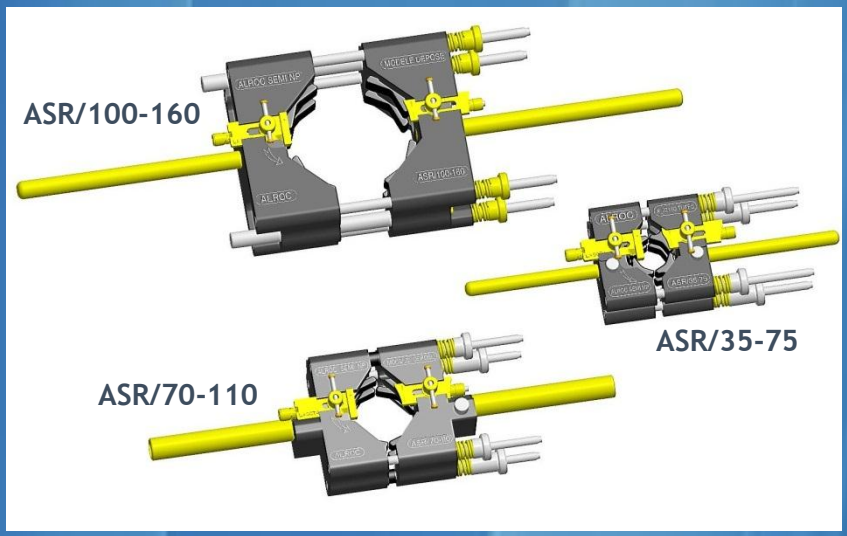

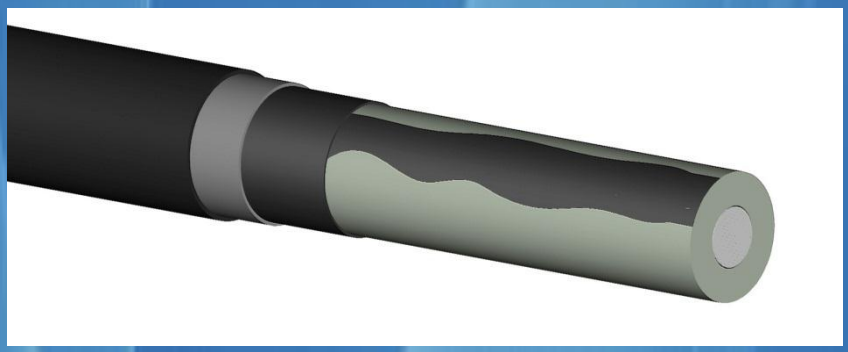

FUNCTIONS	CHARACTERISTICS
The ASR tool allows to remove the bonded semi-conductor without damaging the insulation layer, especially suited when the cable is not perfectly cylindrical.	☞ Removes the bonded semi-conductor screen ☞ Reshape cable to a cylindrical form on the insulation

Diameter on the semi-conductor screen	Ref :	Weight
35 - 75 mm	ASR/35-75	3 kg
70 - 110 mm	ASR/70-110	4,6 kg
100 - 160 mm	ASR/100-160	9,8 kg

ALROC
Z.I de la fonderie
72160 Tuffé
FRANCE

Tel:
+33 (0)2 43 71 11 80
Fax:
+33 (0)2 43 71 16 51

www.alroc.fr
commercial@alroc.fr

HV – BONDED SEMI-CONDUCTOR
ASR/F

A
S
R
/F

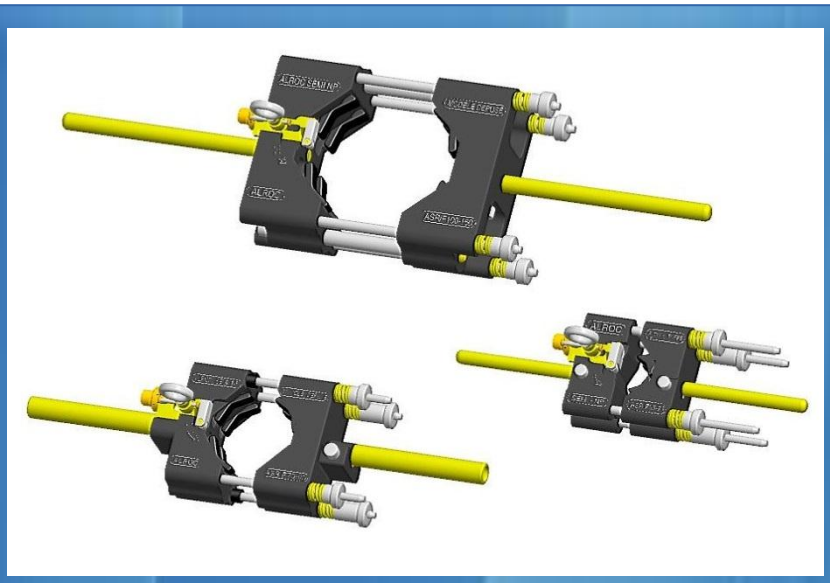

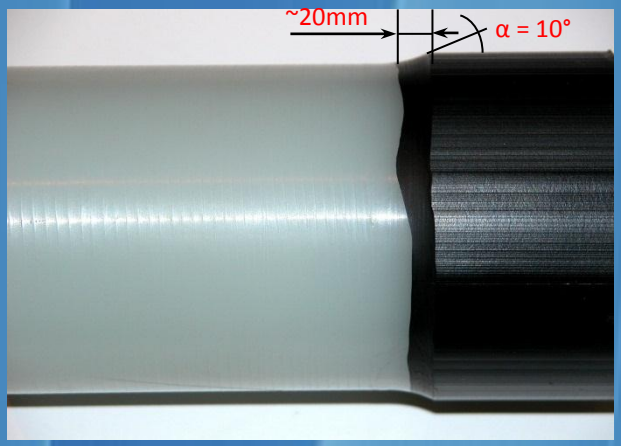

FUNCTIONS	CHARACTERISTICS
The ASR tool allows to remove the bonded semi-conductor without damaging the insulation layer, especially suited when the cable is not perfectly cylindrical. In addition to the above, the finition is superior to the ASR tool.	☞ Removes the bonded semi-conductor screen ☞ Reshape cable to a cylindrical form on the insulation ☞ Cone preparation on the bonded semi-conductor ☞ Clean surface finish on the insulation ☞ Important reduction time through reduced sanding on the insulation

Diameter on the semi-conductor screen	Ref :	Weight
35 - 75 mm	ASR/F35-75	3,3 kg
70 - 110 mm	ASR/F70-110	4,8 kg
100 - 160 mm	ASR/F100-160	10 kg

ALROC
Z.I de la fonderie
72160 Tuffé
FRANCE

Tel:
+33 (0)2 43 71 11 80
Fax:
+33 (0)2 43 71 16 51

www.alroc.fr
commercial@alroc.fr

INSULATION

Product range overview

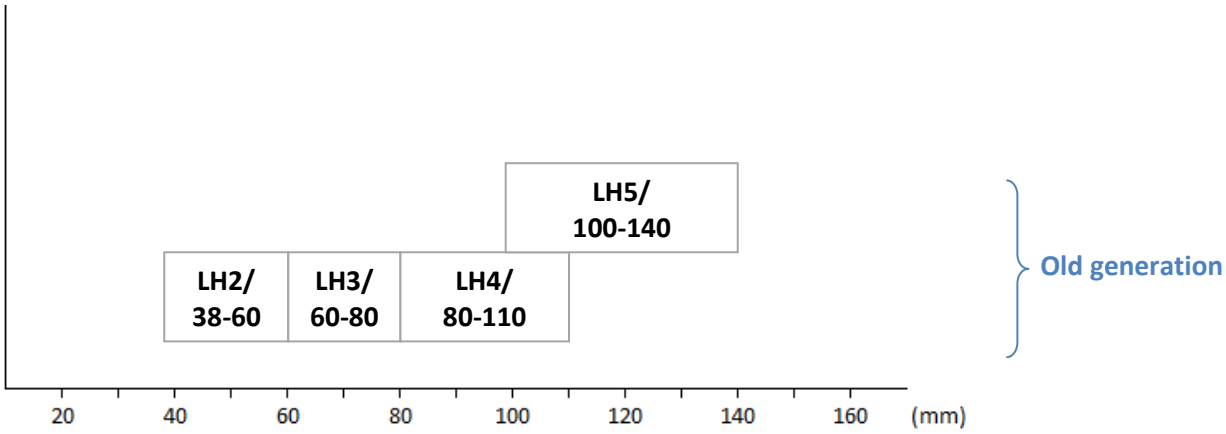

Used with
(except C/PP)

BMFD 50-160

HV – BONDED SEMI-CONDUCTOR
LH

L

H

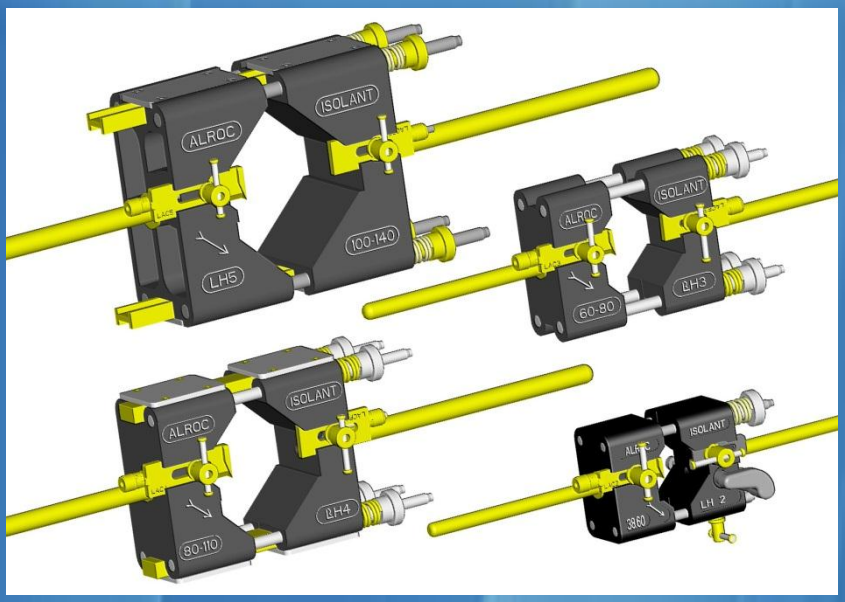

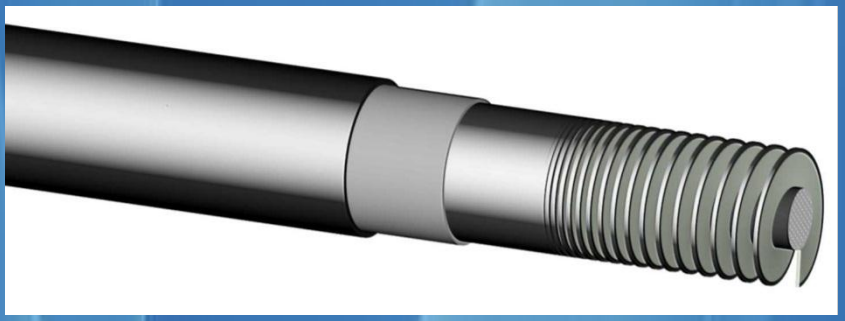

FUNCTIONS	CHARACTERISTICS
LH tools remove insulation from HTB cables.	Insulation removal

Cable diameter	Ref :	Weight
38 - 60 mm	LH2	2 kg
60 - 80 mm	LH3	3 kg
80 - 110 mm	LH4	5,9 kg
100 - 140 mm	LH5	8,5 kg

Z.I de la fonderie
72160 Tuffé
FRANCE

Tel:
+33 (0)2 43 71 11 80
Fax:
+33 (0)2 43 71 16 51

www.alroc.fr
commercial@alroc.fr

CHANNEL & CONES ON INSULATION

Product range overview

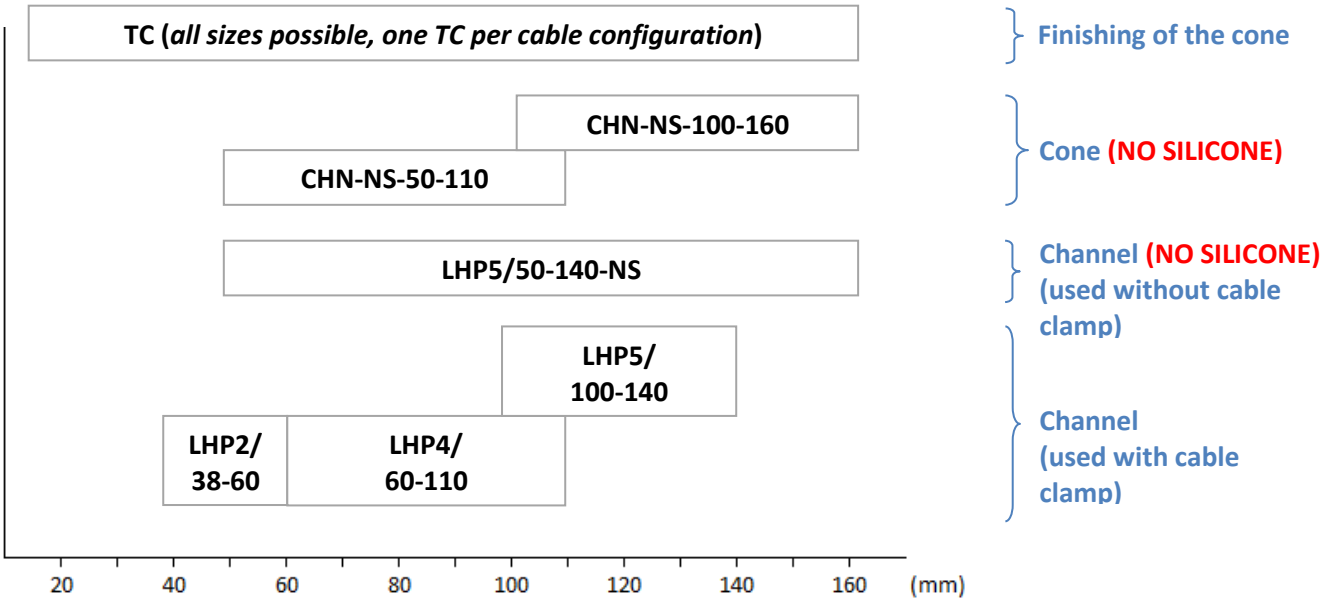

Used with :
(except for TC + LHP5/50-140-NS)

BMFD 50-160

HV - INSULATION
CHN - NS

C
H
N
-
NS

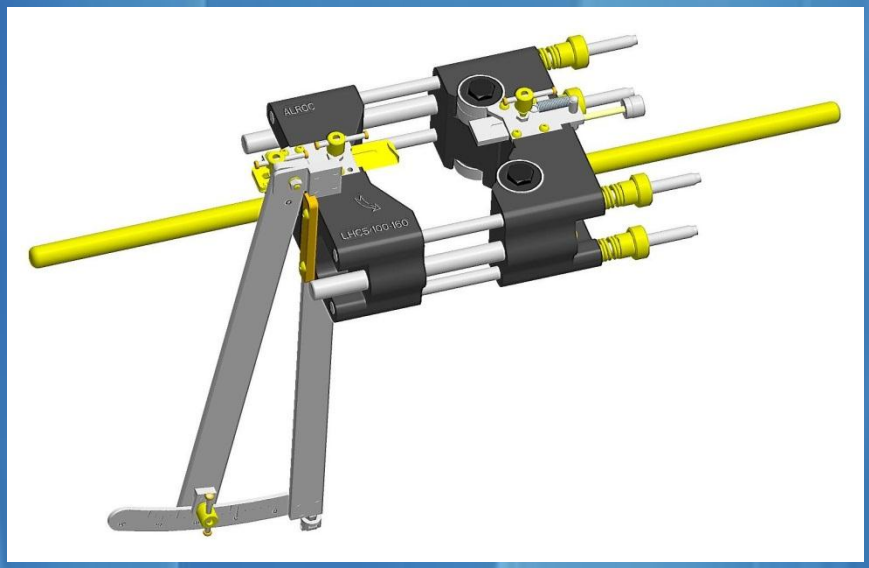

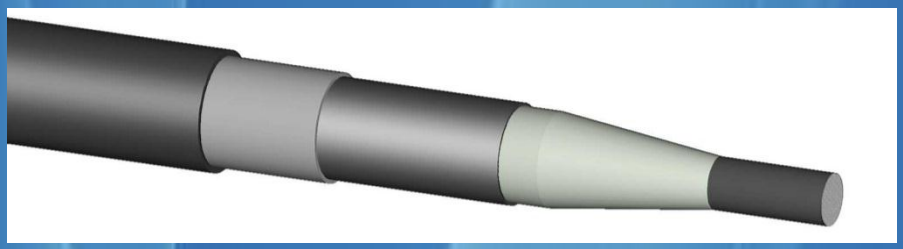

FUNCTIONS	CHARACTERISTICS
LHC-NS tools allow to perform a straight cutting or tapers on cable insulation. Use of tool without lubrication.	Taper realization on cable insulation Supplied with cable clamp Delivered in plastic case

Cable diameter	Ref :	Weight
50 - 110 mm	CHN4/60-110-NS	7.6 kg
100 - 160 mm	CHN5/100-160-NS	13.3 kg

ALROC
Z.I de la fonderie
72160 Tuffé
FRANCE

Tel:
+33 (0)2 43 71 11 80
Fax:
+33 (0)2 43 71 16 51

www.alroc.fr
commercial@alroc.fr

HV - INSULATION
TC

T
C

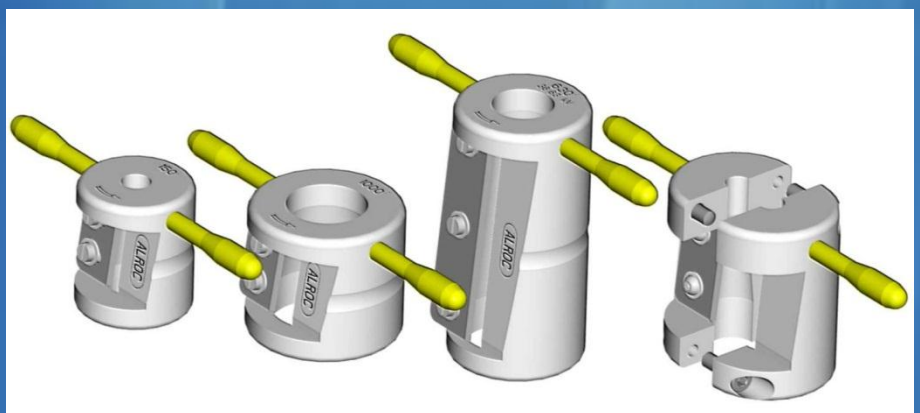

Cones are customized

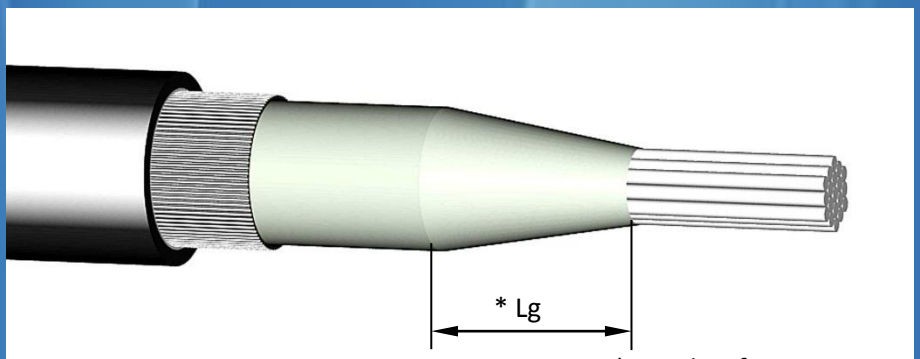

* Lenght of cone

FUNCTIONS	CHARACTERISTICS
ALROC-TC tools taper the insulation	☞ TC tool is calibrated per cable section ☞ Standard taper length : 30 to 40 mm ☞ Ask for special taper lengths : 65 mm,95 mm,120 mm

Tension	Conductor section	Cone lenght
6 / 10 kV	10^2 - 240^2	30 - 40mm
8.7 / 15 kV	25^2 - 630^2	
12 / 20 kV	25^2 - 630^2	
18 / 30 kv 36 kv And above	50^2 - 1300^2 Consult us	40 – 65 – 95 – 120mm

* Sections are given for illustrative purposes for cable tensions of 12 and 20kV

ALROC

Z.I de la fonderie
72160 Tuffé
FRANCE

Tel:
+33 (0)2 43 71 11 80
Fax:
+33 (0)2 43 71 16 51

www.alroc.fr
commercial@alroc.fr

HV - INSULATION
LHP

L
H
P

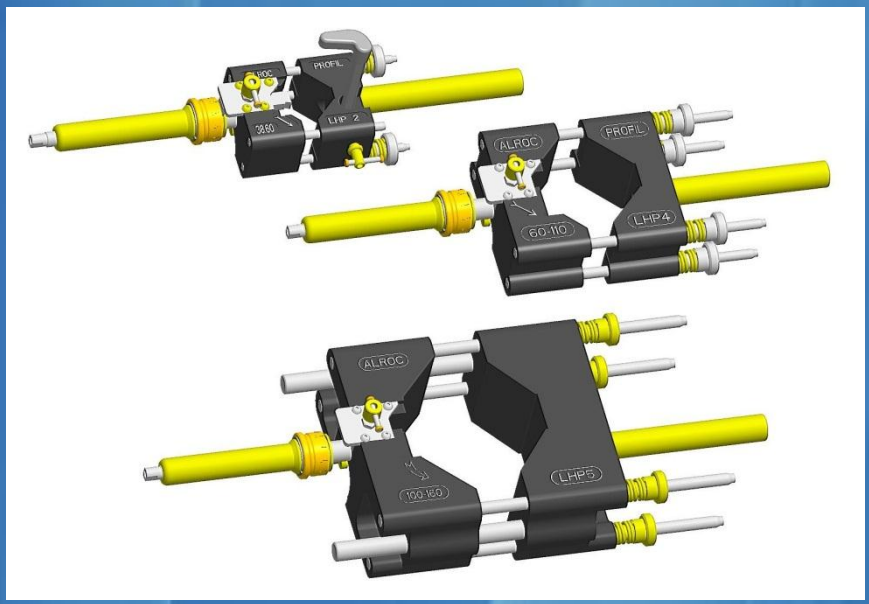

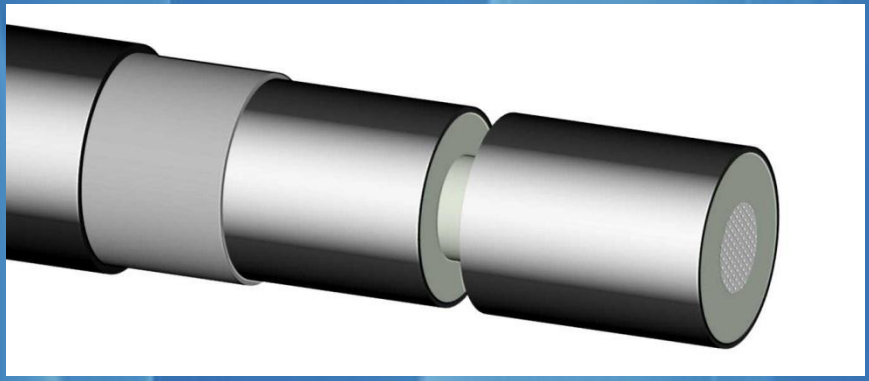

FUNCTIONS	CHARACTERISTICS
The LHP tool allows to remove a part of the insulation and the semi-conductor to make a channel or a groove form.	Realization of a groove in the insulation. Various blades add-ons can be mounted to realize any groove or channel shape. Requires a cable clamp to be operated (sold separately).

Blades add-ons and blocks are sold separately

Cable diameter on insulation	Ref :	Weight
38 - 60 mm	LHP2	2,7 kg
60 - 110 mm	LHP4	4,5 kg
100 - 160 mm	LHP5	10,5 kg

ALROC
Z.I de la fonderie
72160 Tuffé
FRANCE

Tel:
+33 (0)2 43 71 11 80
Fax:
+33 (0)2 43 71 16 51

www.alroc.fr
commercial@alroc.fr

HV - INSULATION
LHP5 NS

L H P 5 - NS

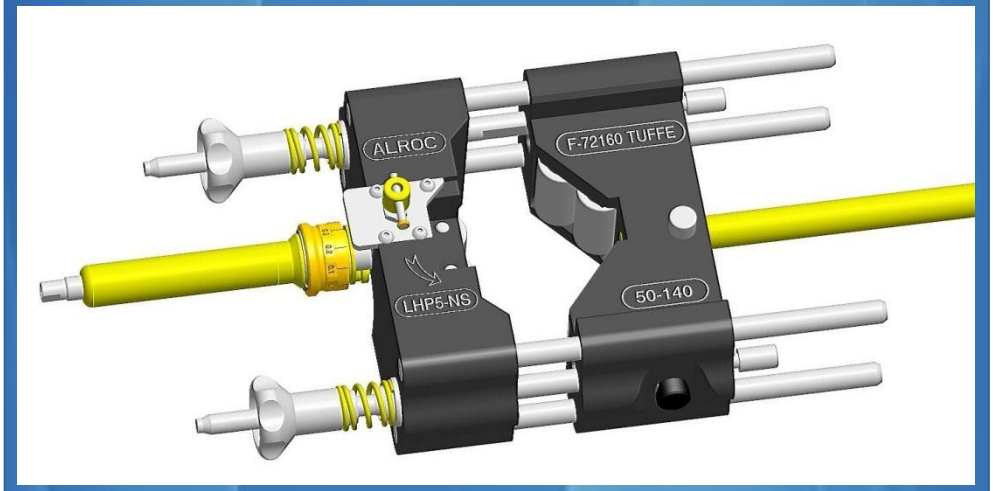

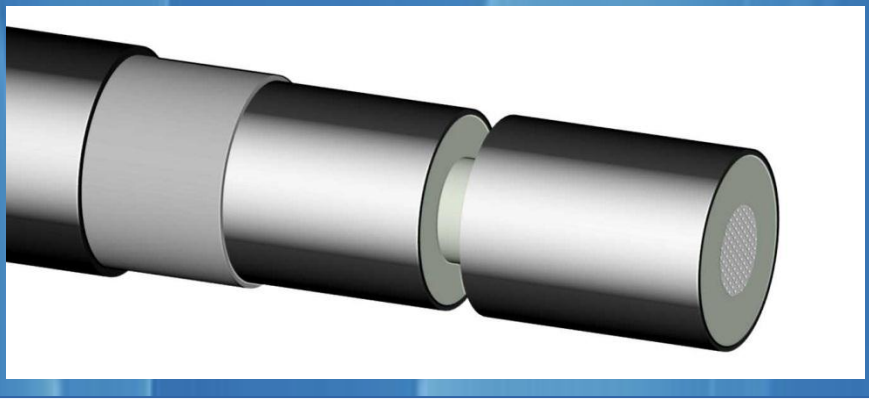

FUNCTIONS	CHARACTERISTICS
The LHP5/50-140-NS tool allows to remove a part of the insulation and the semi-conductor to make a channel or a groove form. This tool is used without lubrication.	Realization of a groove in the insulation. Unlike the standard LHP tool, the LHP5 NS does not require a cable clamp to be operated. Delivered in plastic case. Capacity : Ø50 - 160mm L : 610 mm Weight : 10.1 kg l : 226 mm H : 122 mm Blades add-ons are sold separately

ALROC

Z.I de la fonderie
72160 Tuffé
FRANCE

Tel:
+33 (0)2 43 71 11 80
Fax:
+33 (0)2 43 71 16 51

www.alroc.fr
commercial@alroc.fr

HV - INSULATION
Choix des lames pour LHP

L
H
P
L

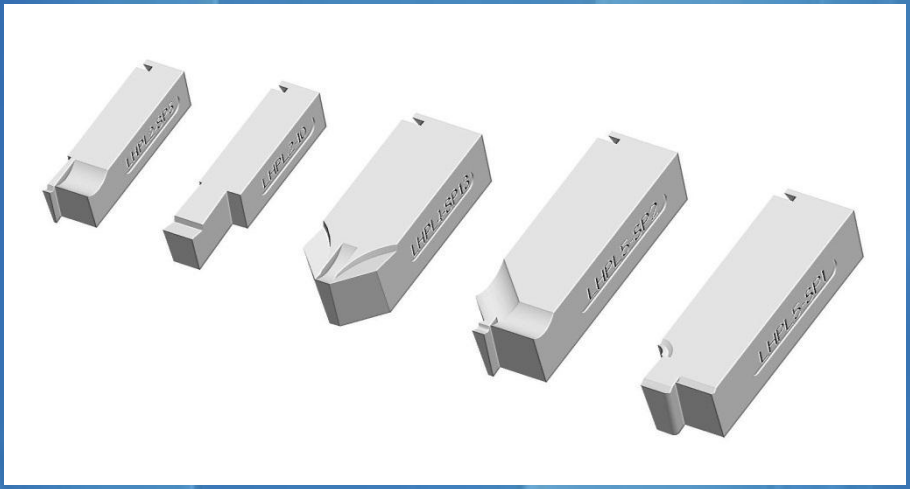

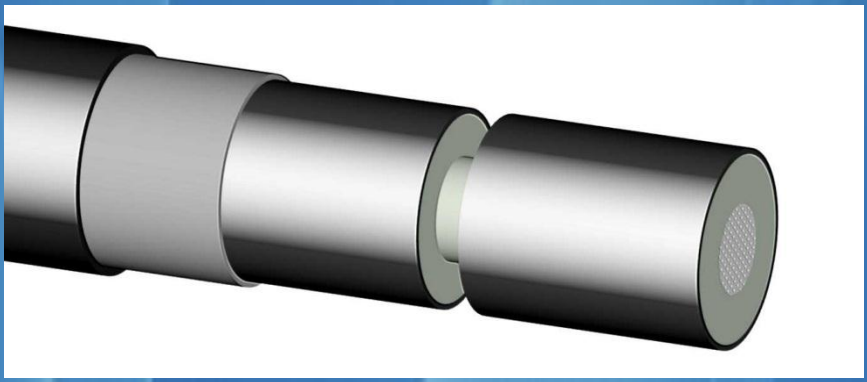

FUNCTIONS	CHARACTERISTICS
LHPL add-on blades are fitted on ALROC tools referenced LHP to perform a channel or a groove form on the insulation of HV cables.	Realization of a channel on the insulation All groove forms and profiles upon request.

Blades add-ons and blocks are sold separately.

Tool	Tool capacity	Reference
LHP2	Ø38 - 60 mm	LHPL2-...
LHP4	Ø60 -110 mm	LHPL4-...
LHP5	Ø100 - 160 mm	LHPL5-...
LHP5 NS	Ø50 - 140 mm	LHPL5 NS -...

ALROC
Z.I de la fonderie
72160 Tuffé
FRANCE

Tel:
+33 (0)2 43 71 11 80
Fax:
+33 (0)2 43 71 16 51

www.alroc.fr
commercial@alroc.fr

1- Blade for single groove

Blade reference	For tool :		
A (mm)	LHP2 B maxi = 21	LHP4 B maxi = 30	LHP5 B maxi = 35
5	LHPL2-5	LHPL4-5	LHPL5-5
10	LHPL2-10	LHPL4-10	LHPL5-10
15 (14 for LHP2)	LHPL2-14	LHPL4-15	LHPL5-15
20		LHPL4-20	LHPL5-20
25		LHPL4-25	LHPL5-25

Other dimensions upon request

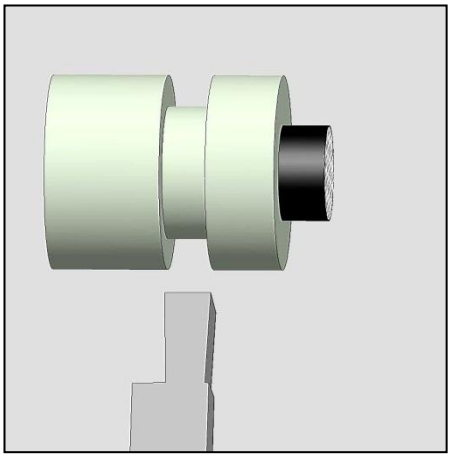

2- Blade for shouldered groove

Blade reference	A	B	C maxi	D maxi	For tool
LHPL2-SP5	2.5	3	11	15	LHP2
LHPL2-SP6	4	4	9.5	15	LHP2
LHPL4-SP6	10	3	13	30	LHP4
LHPL4-SP10	7	4.5	15	13	LHP4
LHPL4-SP11	7	5	15	13	LHP4
LHPL4-SP12	6	4	14.5	16	LHP4
LHPL4-SP14	4	4	20.5	16	LHP4
LHPL5-SP4	6	4	14.5	16	LHP5
LHPL5-SP5	4	4	20.5	16	LHP5

All other dimensions upon request

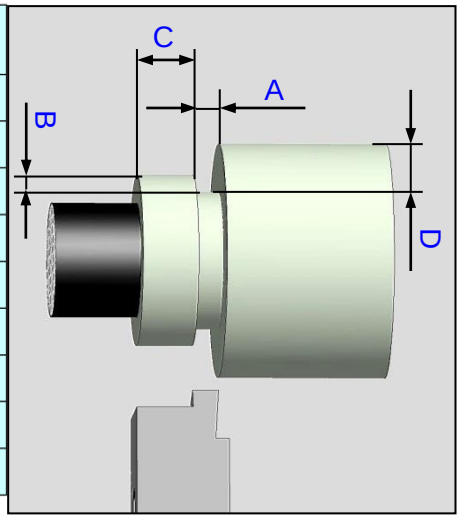

- ☞ **The tools must be used when the cable is out of tension by skilled workers who are competent in cable preparation and know about electrical phenomenons.**
- ☞ **Wearing anti-cut gloves is obligatory.**
- ☞ **Clean the tools after each utilization.**

3- Blade for shouldered groove with chamfer

Blade reference	A	B	C maxi	D	E	For tool :
LHPL2-SP3	2.7	3	6.25	7	4	LHP2
LHPL2-SP4	4	3	5.6	5	2	LHP2
LHPL4-SP2	4	4	14.5	10	4	LHP4
LHPL4-SP3	6	4	14.5	10	4	LHP4
LHPL4-SP5	5.25	10	16.75	18.5	3	LHP4
LHPL5-SP2	4	4	14.5	10	4	LHP5
LHPL5-SP3	6	4	14.5	10	4	LHP5

All other dimensions upon request

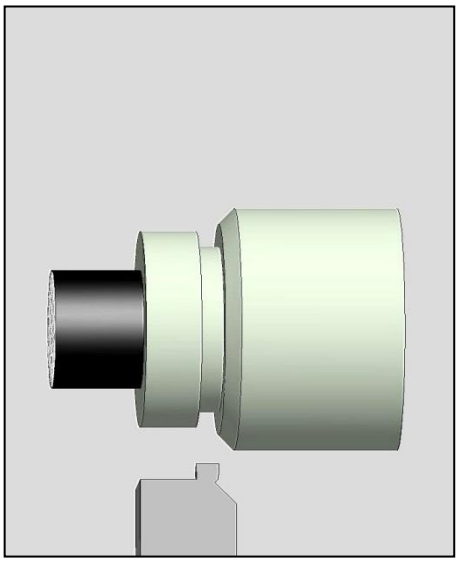

4- Blade for shouldered groove with radius

Blade reference	A	B	C maxi	D	E	For tool :
LHPL2-SP1	2.7	3	8.3	8.75	2.5	LHP2
LHPL4-SP7	8.25	5.5	13.75	13	3	LHP4
LHPL5-SP1	10	5	12	16.1	3	LHP5

Radius of 1.5mm in the back of the groove A except for the blade LHPL2-SP1 with sharp edges

All other dimensions upon request

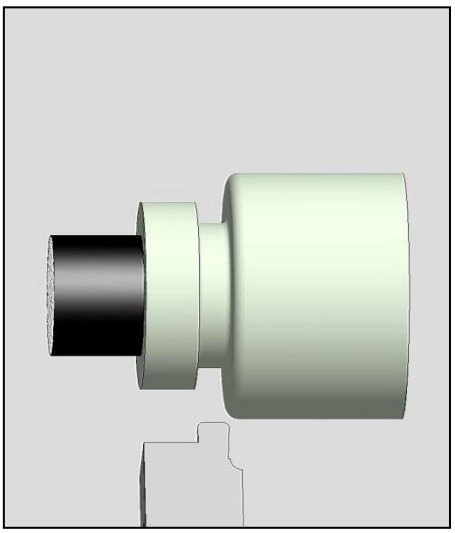

We fabricate all types of blades upon request.
Please send us a drawing with the desired result

- ☞ **The tools must be used when the cable is out of tension by skilled workers who are competent in cable preparation and know about electrical phenomenons.**
- ☞ **Wearing anti-cut gloves is obligatory.**
- ☞ **Clean the tools after each utilization.**

ALROC S.A.S - ZI de la Fonderie - 72160 TUFFE - FRANCE - Tél : 02.43.71.11.80 - Fax : 02.43.71.16.51
Internet :www.alroc.fr - Email :commercial@alroc.fr -
S.A.S au capital de 800000€ - 341 050 987 RCS LE MANS - SIRET 341 050 987 00013 - APE 2453Z - TVA/FR 77 341 050 987

MULTIFUNCTIONS

(SEMI-CONDUCTOR SCREEN + INSULATION)

Product range overview

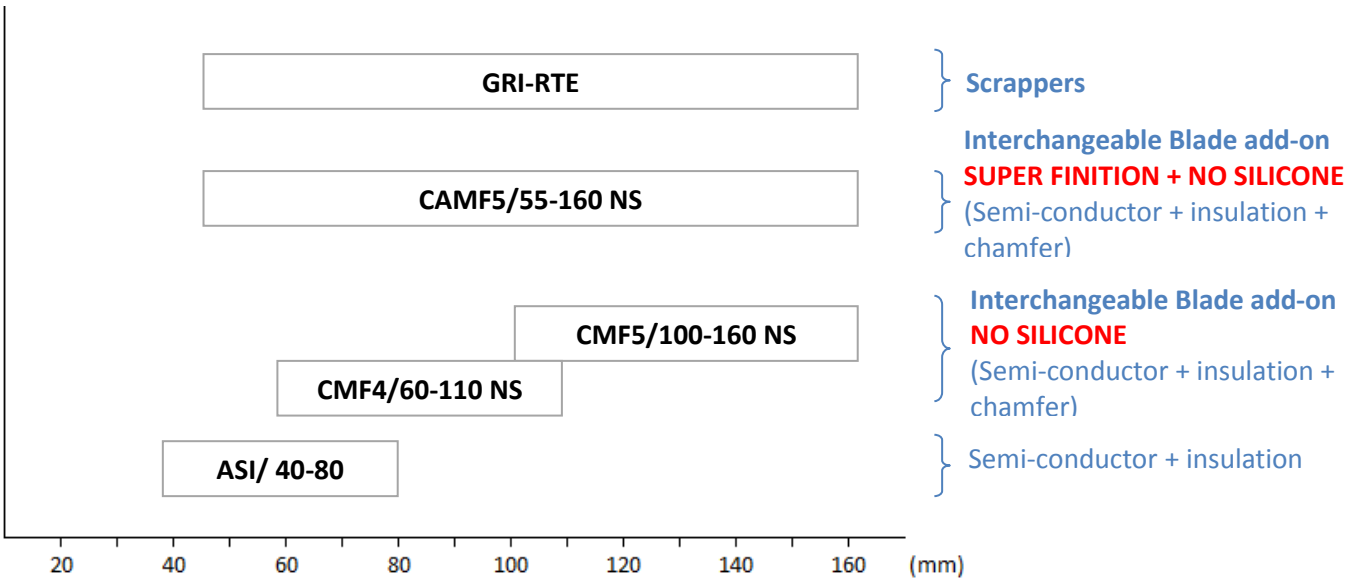

Used with (except GRI-RTE)

BMFD 50-160

HV – MULTIFUNCTIONS
CAMF5/55-160-NS

C A M F5 / 55-160 NS

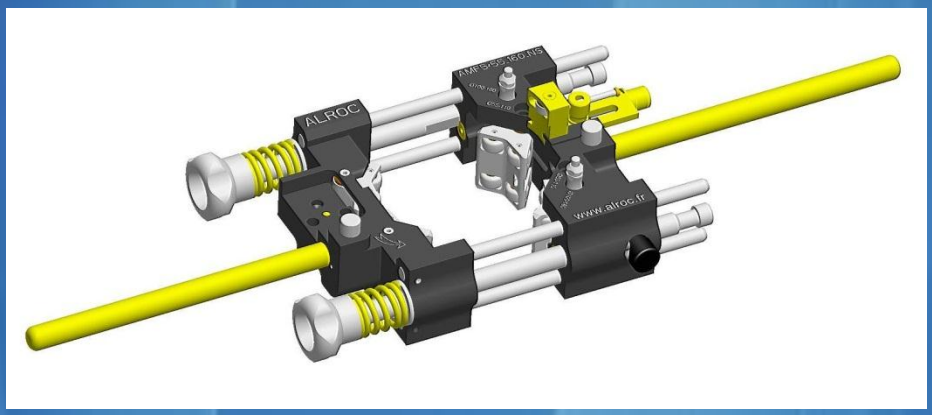

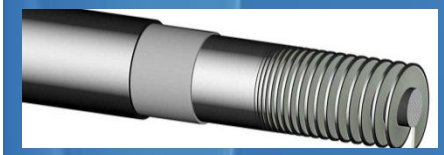

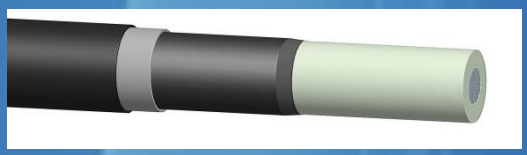

K7/INS

K7/FNS

FUNCTIONS	CHARACTERISTICS
The CAMF5/55-160-NS tool removes the semiconductor while leaving a very clean surface on the insulation, in addition to striping the insulation layer As a multi-function tool, additional add-ons allows it to also perform: - Chamfer on the insulation - Grooves on the insulation - Increased conical outline on the bonded semi-conductor screen This tool does not require silicone to be operated.	☞ Covers cable diameter ranging from 55 to 160mm ☞ Removal of bonded semiconductor, leaving a conical outline ☞ Very clean surface finish ☞ Reversible blade ☞ Removal of insulation ☞ Supplied in plastic case ☞ Substantial reduction for time previously needed to sand the insulation L: 700 mm Weight : 9.5kg l : 255 mm H : 180 mm

ALROC

Z.I de la fonderie
72160 Tuffé
FRANCE

Tel:
+33 (0)2 43 71 11 80
Fax:
+33 (0)2 43 71 16 51

www.alroc.fr
commercial@alroc.fr

HV – MULTIFUNCTIONS
CMF4/60-110-NS CMF5/100-160-NS

C
M
F
-
NS

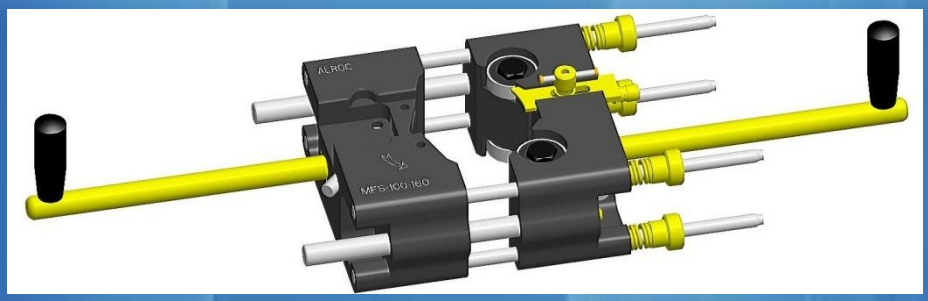

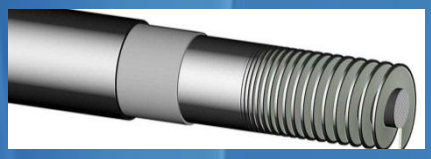

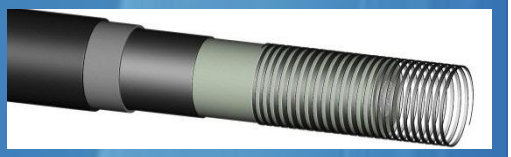

K7/ISOLANT-NS

Optional blade add-on:

K7/SEMI-NP-NS

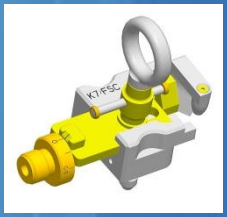

FUNCTIONS	CHARACTERISTICS
CMF* NS tool case allows to remove the bonded semi-conductor and the insulation. It also allows to perform a channel on the insulation from HV cables. This tool does not require silicone to be operated.	☞ Bonded semi-conductor removal ☞ Insulation removal ☞ Channel realization in the insulation ☞ Semi-conductor removal with a very clean surface and a sketch of cone

Cable diameter	Ref :	Weight
60 - 110 mm	CMF4/60-110-NS	5,6 kg
100 - 160 mm	CMF5/100-160-NS	11,4 kg

ALROC

Z.I de la fonderie
72160 Tuffé
FRANCE

Tel:
+33 (0)2 43 71 11 80
Fax:
+33 (0)2 43 71 16 51

www.alroc.fr
commercial@alroc.fr

HV – MULTIFUNCTIONS

K7/FSC (pour MF4/60-110-NS et MF5/100-160-NS)

K
7
/
F
S
C

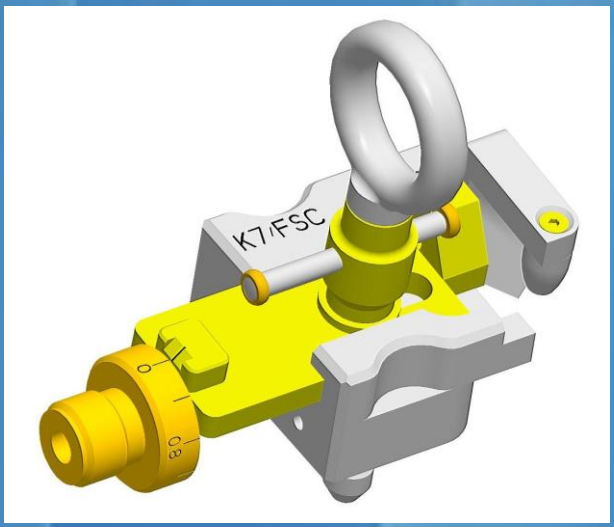

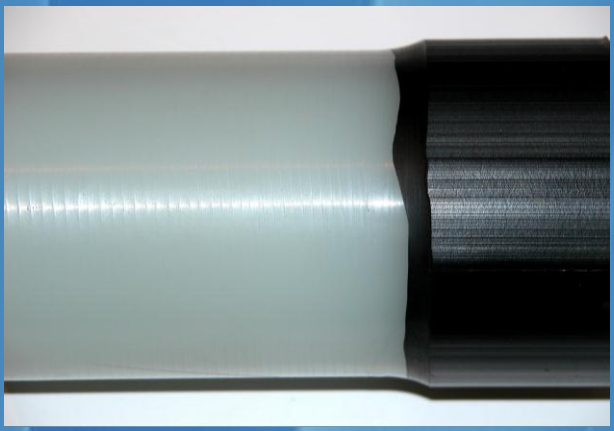

FUNCTIONS	CHARACTERISTICS
K7/FSC is specially designed to remove bonded semi-conductor from cables by performing a taper/ cone on the semi-conductor screen while keeping a very clean surface on the insulation ☞ K7/FSC can be installed on MF4/60-110 and MF5/100-160 tools.	Bonded semi-conductor removal Performs a taper/ cone on the bonded semi-conductor Very clean surface on insulation Substantial reduction of time sanding Compatible with MF4/60-110 or MF5/100-160 tools.

ALROC

Z.I de la fonderie
72160 Tuffé
FRANCE

Tel:
+33 (0)2 43 71 11 80
Fax:
+33 (0)2 43 71 16 51

www.alroc.fr
commercial@alroc.fr

HV – MULTIFUNCTIONS
ASI/40-80

A
S
I
/
40-
80

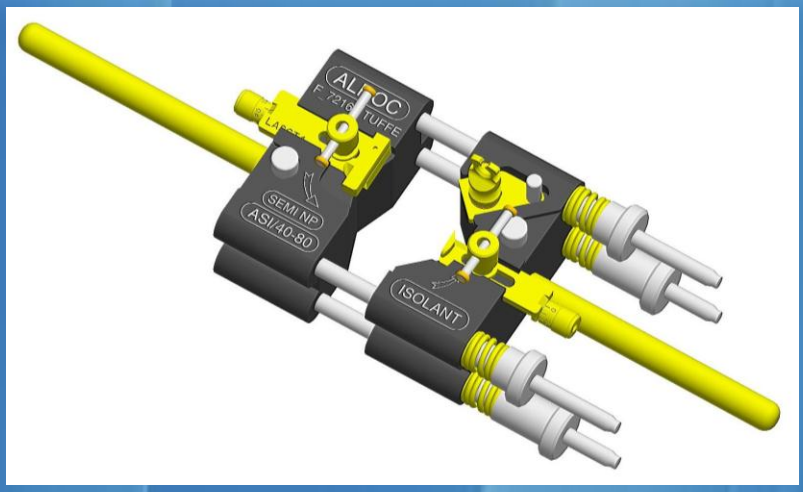

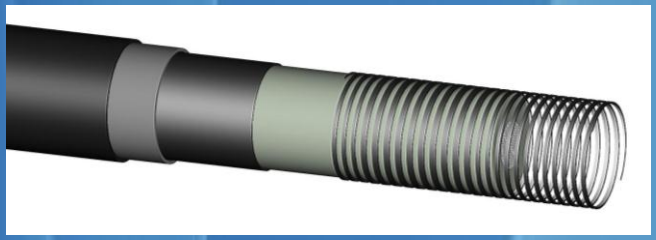

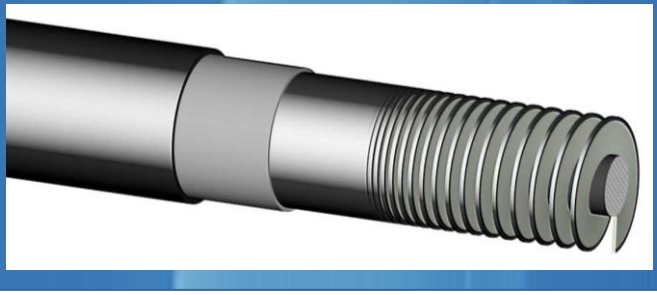

FUNCTIONS	CHARACTERISTICS
The ASI/40-80 tool allows to strip the bonded semi-conductor and to remove the insulation.	Bonded semi-conductor stripping. Insulation removal Capacity : Ø40 à 80mm Option : BMF thrust allows to perform a perfect and clean stop on the insulation or on the bonded semi-conductor. L : 420 mm Poids : 3250g l : 130 mm H : 100 mm

ALROC
Z.I de la fonderie
72160 Tuffé
FRANCE

Tel:
+33 (0)2 43 71 11 80
Fax:
+33 (0)2 43 71 16 51

www.alroc.fr
commercial@alroc.fr

HV – MULTIFUNCTIONS
GRI-RTE

G R I - R T E

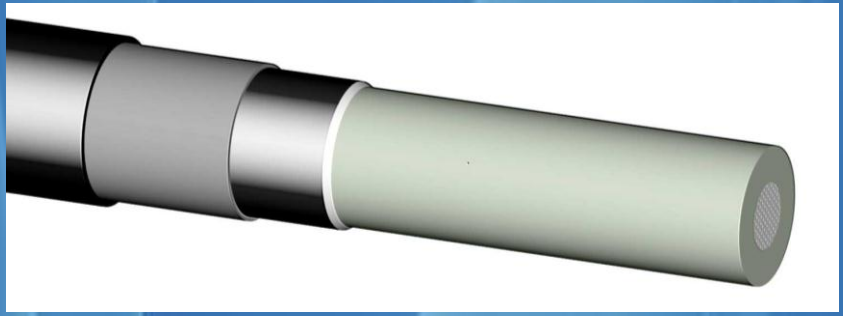

FUNCTIONS	CHARACTERISTICS
GRI scraper allows to remove the outer bonded semi-conductor screen's residuals left on the cable insulation	Scraping of the semi-conductor residual Comes in it a plastic case L : 250 mm Weight : 190g l : 40 mm H : 25 mm

ALROC

Z.I de la fonderie
72160 Tuffé
FRANCE

Tel:
+33 (0)2 43 71 11 80
Fax:
+33 (0)2 43 71 16 51

www.alroc.fr
commercial@alroc.fr

MOTORIZED MULTIFUNCTIONS

(SEMI-CONDUCTOR SCREEN + INSULATION)

Product range overview

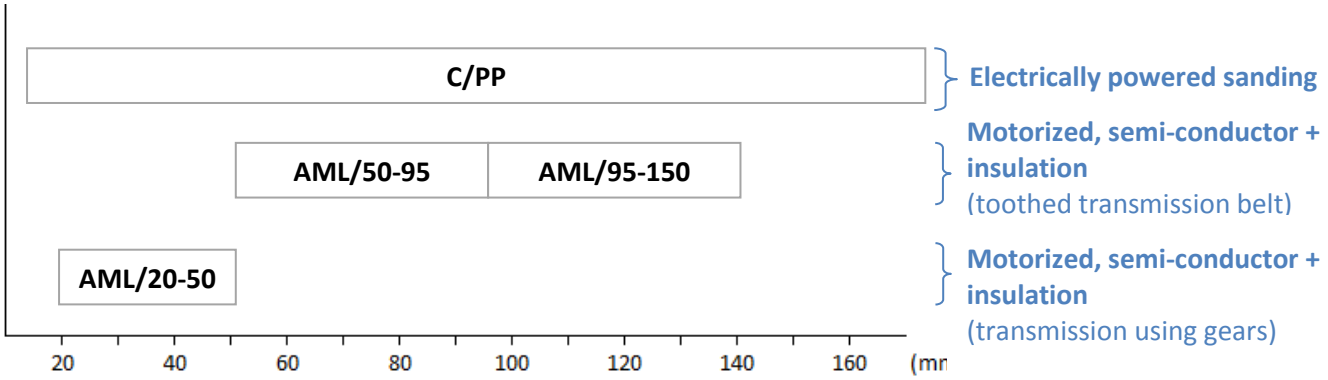

HV – MULTIFUNCTIONS
AML

A
M
L

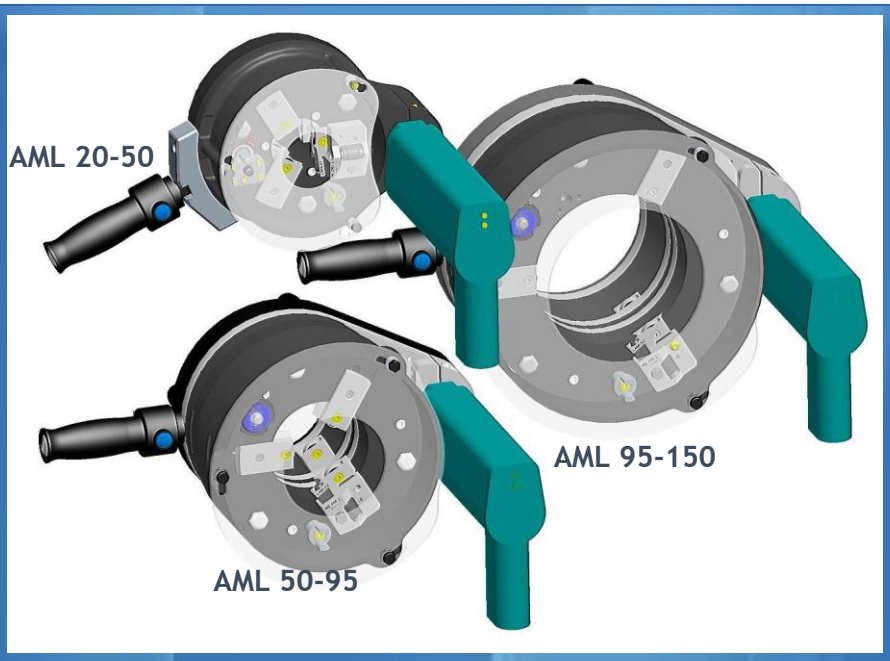

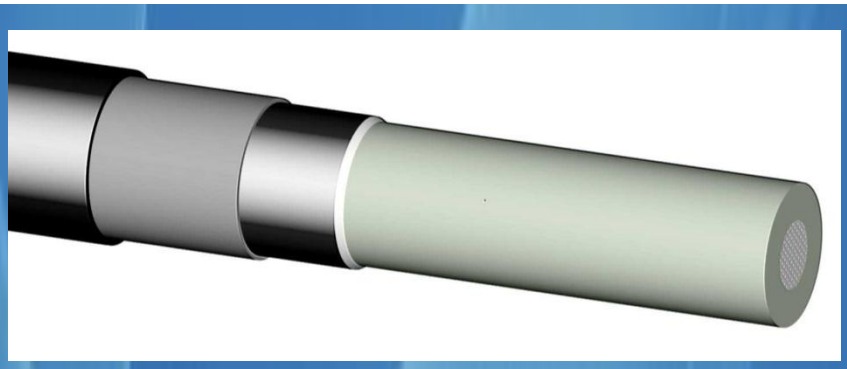

FUNCTIONS	CHARACTERISTICS
The AML machine removes the bonded semi-conductive insulation shield and also a fine layer of insulation if required.	Bonded semi-conductor removal Electrical powered tool Distribution using gears for the AML 20-50 and toothed belt for the 50-95 and the 95-150 AML.

Cable diameter	Ref :	Weight
20 - 50 mm	AML 20-50	8,2 kg
50 - 95 mm	AML 50-95	13,5 kg
95 - 150 mm	AML 95-150	19,7 kg

ALROC
Z.I de la fonderie
72160 Tuffé
FRANCE

Tel:
+33 (0)2 43 71 11 80
Fax:
+33 (0)2 43 71 16 51

www.alroc.fr
commercial@alroc.fr

afaq ISO 9001 Qualité AFNOR CERTIFICATION

K7i/

-

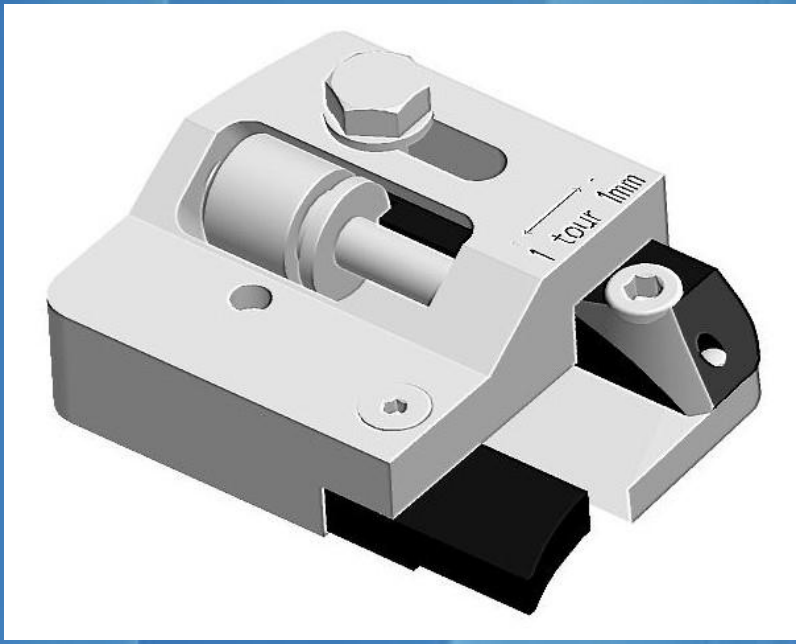

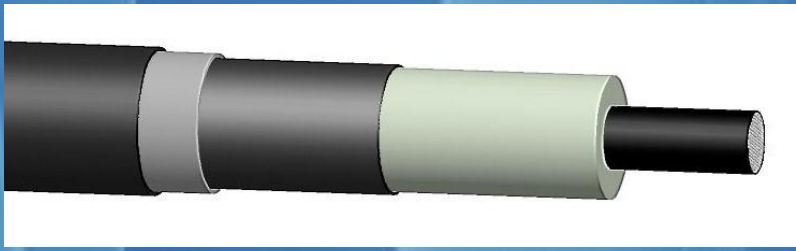

FUNCTIONS	CHARACTERISTICS
K7i/1, K7i/2 and K7i/3 are specially conceived to remove the insulation using AML machines.	**Insulation removal** **K7I/1 is installed on the AML20-50 tool** **K7I/2 is installed on the AML50-95 tool** **K7I/3 is installed on the AML95-150 tool**

Ref.	Stripping Thickness min + max		
	AML 20-50	AML 50-95	AML 95-150
K7i/1	5 – 16 mm	6 – 17 mm	6 – 17 mm
K7i/2-15	*Non compatible*	2 – 15 mm	2 – 15 mm
K7i/2	*Non compatible*	11 – 24 mm	11 – 24 mm
K7i/3	*Non compatible*	*Non compatible*	16 – 34 mm

ALROC
Z.I de la fonderie
72160 Tuffé
FRANCE

Tel:
+33 (0)2 43 71 11 80
Fax:
+33 (0)2 43 71 16 51

www.alroc.fr
commercial@alroc.fr

HV – MULTIFUNCTIONS
C/PP

C
/
P
P

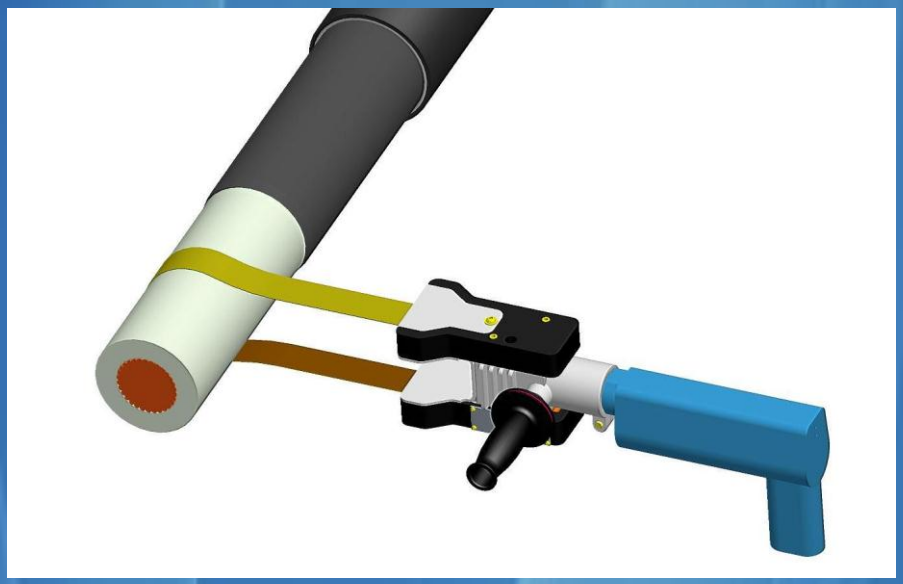

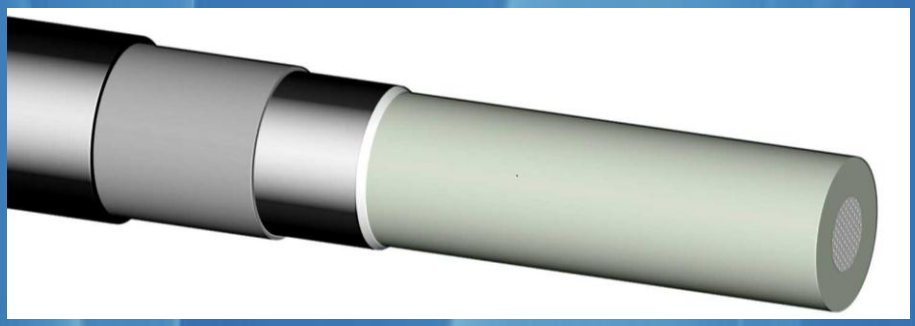

FUNCTIONS	CHARACTERISTICS
The ALROC portable sanding machine is used to take out the roughnesses on the cable after using the ALROC tools LHS and AML	Sandpaper the cables Delivered in case with grease pomp L : 505 mm l : 360 mm H : 120 mm Weight : 5,5 kg Case weight : 9.6kg

ALROC
Z.I de la fonderie
72160 Tuffé
FRANCE

Tel:
+33 (0)2 43 71 11 80
Fax:
+33 (0)2 43 71 16 51

www.alroc.fr
commercial@alroc.fr

CABLE CLAMP

HV – MULTIFUNCTIONS
BMFD/50-160

B
M
F
D
/
50-
160

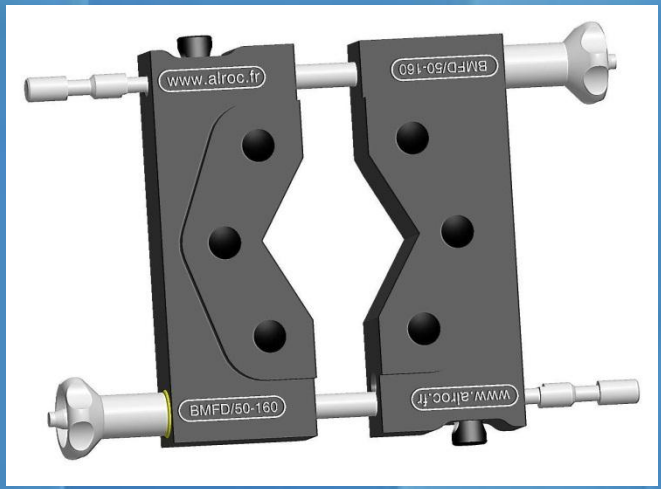

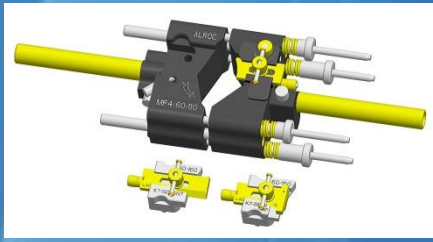

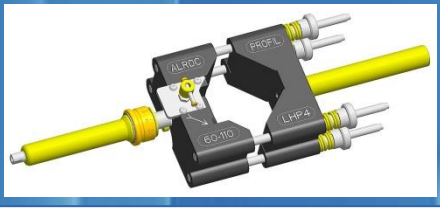

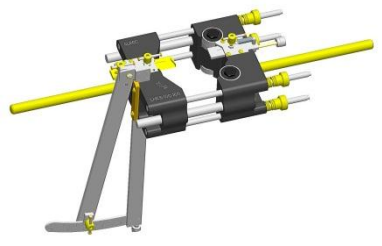

FUNCTIONS	CHARACTERISTICS
The BMFD/50-160 thrust has 3 clamping positions to cover a wider range of cable diameters. The BMFD/50-160 thrust is reversible and designed for two functions : 1. It is used as a stop for the tool with its pads. 2. It serves as a running surface of the ALROCONE rollers. (Supplied with 2 sets of plates)	3 clamping positions Is used with teh following tools - AMF5/55-160-NS - ASR/70-110 - MF4/60-110-NS - ASR/100-160 - MF5/100-160-NS - DMSR/80-160 - LHP4 - CHN4-60-110-NS - LHP5 - CHN5-100-160-NS - AUG5/60-160 Capacity : Ø50-160mm L : 345 mm Weight : 2.5 kg l : 245 mm H : 50 mm

ALROC
Z.I de la fonderie
72160 Tuffé
FRANCE

Tel:
+33 (0)2 43 71 11 80
Fax:
+33 (0)2 43 71 16 51

www.alroc.fr
commercial@alroc.fr

AFTER SALES SERVICE

Maintenance of ALROC cases

MAINTENANCE

Before

After

Actions	Objectifs
☞ Blade replacement ☞ Wear plates installation ☞ Re-calibration of all tools. ☞ Exchange of worn parts. ☞ Marking on the cases for follow up maintenance tracability	☞Restore the state of the tools to brand new ☞ Ensures optimum performance from the tools

ALROC

Z.I de la fonderie
72160 Tuffé
FRANCE

Tel:
+33 (0)2 43 71 11 80
Fax:
+33 (0)2 43 71 16 51

www.alroc.fr
commercial@alroc.fr

TERMS OF SALES

1. DEMAND ACCEPTANCE

Orr tenders aren't valid that to acceptance by return letter.
Engagements taken by our reps aren't definitely valid after have been recording by our company.
For unserviceable part, quantity of products delivered and invoiced could be superior of 10 per cent of the quantity ordered.
The annulment of order during execution or finishing don't accepted.

2. PAYMENT STIPULATION

Orr payment stipulations get on with compensating payment to Mans.
Orr invoices are payable to cash, without discount, except particular agreement between party.
According to the law 92-1442 on December 31st 1990, in case of delay payment in comparison with the date of payment, penalty are due, they are calculated by using to minimum the equal rate once and half the legal interest rate of civil year, preceding the date of invoice between the date of payment representing on the invoice and the date of payment received.
All delay or failure to pay or substantial changing in the situation of buyer at exacted a payment before all new expeditions.

3. DELAY AND DELIVRING

Delay of delivering leave of day of acceptance of order, they are gave at indicative title and without guarantee. The delay of delivering can't give place at reducing of price, any penalty or indemnity according previous express acceptance and to written of our company, with reciprocity equal premium in case of advantage at the delivering, our company is freeing of all relative mortgaging at the delay of delivering in the case of absolute necessity as: shore, fire, manufacture or set of tools accident, default of raw, stop of driving force, etc, these cases carry the suspension of delivering and extend the delay laid down.
In case of defectiveness, our responsibility restrict oneself to the slight alteration of defective part or at their pure and simple replacing in the shorter possible delay, without others consequences, any cost or indemnity. The complaints must be in by the latter, six day after receipt of goods. After this delay, our company doesn't admit it.

4. TRANSFER OF RISKS

Whatever the mode of expedition, our goods exclusively travel at one's own risk of customer part. All our expedition are famous according made at the order of buyer and to his account, except contrary expressly formulated willing.
It will belong buyer to make firm the goods sold from their exit of our factory and this until the date of transfer of property against all risks of damage of destruction or of responsibility caused or suffered by them.

5. CLAUSE OF SHARE OF PROPERTY

According to the law 80-335 on May 12th 1980, the transfer of property of our products is suspended until entire payment of their price in principal and accessory same in case of concession of delay of payment. The application of this clause wouldn't, in anyone case, to modify the application of conditions concerning the transfer of risks. Don't constitute a payment the discount of bill accepted or other titles creating an obligation to pay. Buyer wills became proprietor at the moment of payment effectively credited at our bank, of the last maturity, with accessory cost. In consequence, in case of partial or total no-payment of price at the maturity for any cause whatever, our company could be required from full right and without formality the restitution of products sold at the cost, one's own risk of buyer.

6. JURISDICTION ASSIGNING

In case of contesting or litigation of any mature whatever, the trade tribunal of LE MANS will be only competent, same in case of appeal in guarantee or of plurality of defendant.
The present sale general stipulation to apply oneself to all orders recorded by our company to the exclusion of all clause representing on the letters and bill of order from our customer except express and written acceptance by our care.

THORNE & DERRICK UK

Tel: +44 (0)191 490 1547
Fax: +44 (0)191 477 5371
Email: northernsales@thorneandderrick.co.uk
Website: www.cablejoints.co.uk
www.thorneanderrick.co.uk