Kabeldon cable accessories 1 - 420 kV

2007, edition 1

Table of contents

Page

Introduction 4
Fundamental technologies 5
Reasons for choosing Kabeldon cable accessories 6
Standards 8
Reference illustrations 10
Table of contents Kabeldon cable accessories ≤ 1 kV 22
Table of contents Kabeldon cable accessories 12-36 kV 33
Table of contents Kabeldon cable accessories 52-420 kV 91
Universal clamps 123
List of contents in alphabetical order 126
List of contents by product category 133

We reserve the right to alter the design and range of our products.

Introduction

We work to create safe electrical distribution via cable networks. To achieve this, we develop, manufacture and market a broad range of cable accessories, switching devices and enclosures. Our main groups of customers are power supply company, network companies, industrial companies and OEMs.

Our primary areas of expertise are electrical connections in cable systems and control of electrical field.
Our own testing plant is an important aid to product development.

Our factory is situated in Alingsås about 50 kilometres north-east of Gothenburg (Göteborg).

The production is automated and meets stringent quality and environmental requirements.

Quality and the environment are among our top-priorities. They are important and self-evident parts of the strategic plan.

Our carefully considered investments in quality and the environment are based on modern principles. They lead to the fulfilment of ambitious goals for competitiveness and profitability, with a view to maximising value to the customer.

We work continuously to improve our processes. Important foundations for this work are:

- ***ISO 9001 quality standard***
- ***ISO 14001 environmental standard.***

ISO 9001 BUREAU VERITAS Certification

ISO 14001 BUREAU VERITAS Certification

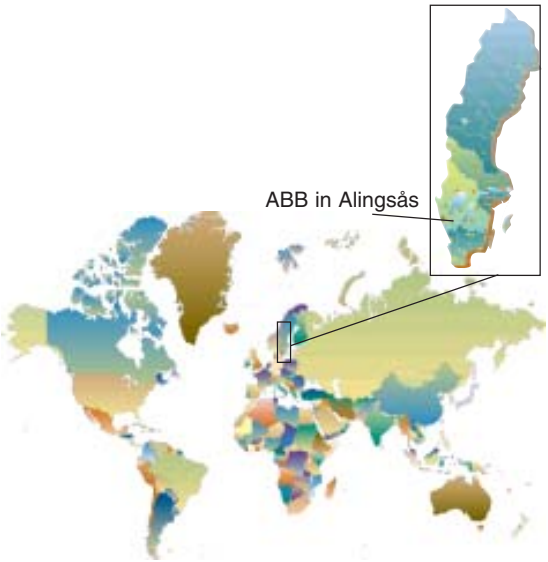

Our enterprise is situated in Alingsås, Sweden and has about 190 employees.

Kabeldon products are representated in cable networks all over the world.

Our business idea is:
"We provide companies that work with electric power with solutions which enable them to joint and connect cables easily and safely, and distribute electricity".

Catalogue

The introductory pages show the most important products in their proper environment. The entire range is then presented in three main parts.

- Cable accessories ≤ 1 kV
- Cable accessories 12-36 kV
- Cable accessories 52-420 kV

including product facts and ordering information in table form. An alphabetical list of contents and a list of contents by product category can be found in the end of this catalogue.

The product catalogue is also available on CD and at our webb sight.

We reserve the right to alter the design and range of our products.

ABB AB
Kabeldon
Box 531, SE-441 15 Alingsås, Sweden
Tel: +46 322 770 00
Fax:+46 322 770 01
www.abb.se/kabeldon

Fundamental technologies

We work on the basis of four fundamental technologies within which we have accumulated substantial expertise over many years.

Electrical connections
The safe and secure transfer of electric current between cable conductors or between a cable conductor and a device requires a good-quality electrical connection. We test and develop various methods, but in most cases we use screw technology. This gives us the possibility of offering complete solutions in line with our philosophy of easy and safe installation.

Screw connector for joint.

Controlling electrical fields
At high voltages the electrical fields must be controlled so that the strength of the insulation or the surrounding material is not put at risk. Depending on the voltage level, we work with different methods, e.g. geometrical, refractive or resistive field control. Geometrical field control is achieved with premoulded stress cones and splicing blocks. Resistive and refractive field control are achieved with special field-controlling materials integrated into prefabricated termination blocks.

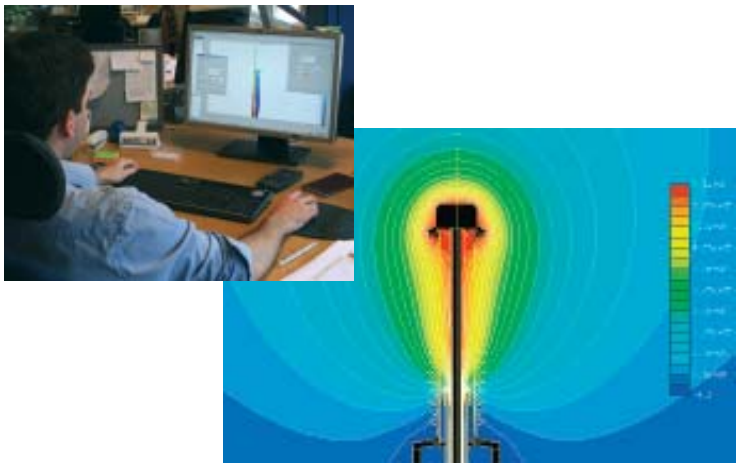
Cable termination illustrated with equipotential lines.

Development of creepage current resistant materials
Outdoors, cable accessories are exposed to major stresses, e.g. UV radiation from the sun and creepage currents caused by precipitation and pollution. Cable accessories are installed everywhere on the face of the planet: in humid tropical environments, in extreme cold or in the swirling salt mist of coastal regions. We develop materials and designs for outdoor use that are only minimally affected by external factors. In the case of cable terminations, it's the insulators, both in the porcelain and the composite material. Practical endurance tests are an important part of our development work. In addition to Weather-O-Meter tests, salt-mist-chamber tests and other destructive long-term tests, the products are tested under extreme weather conditions.

Flash-over during voltage withstand test of a cable termination.

Creepage currents during salt-mist-chamber test.

Design of low voltage networks
Electrical distribution in cable networks calls for safe and rugged products to make it easier to connect cables and to withstand external factors such as humidity, vibration, etc., for a long time without causing malfunctions. Lengthy experience of our own manufacture of switching devices and hot-dip galvanized enclosures, as well as good customer relations, means that we can quickly adapt product development to suit the needs of the market.
A separate product catalogue for low voltage switchgears is available on request.

Distribution board.

We reserve the right to alter the design and range of our products.

Reasons for choosing Kabeldon cable accessories

A cable network must be capable of supplying electric power without interruption. If a failure does occur, it is usually the junction points on the network that are at fault, rarely the cable. So it pays to choose cable accessories with care.

Unique, long experience
Long experience brings great expertise. We have been manufacturing cable accessories for paper-insulated cables for about 70 years. When XLPE insulated cable began to be used just over 40 years ago, we were involved from the outset. Since then we have always been in the forefront of developments.

Manufacturing outdoor cable terminations for paper-insulated cables in 1962.

Leading research and development
Our watchwords are simplicity and safety.

Our core competence is our expertise in electrical connections in cable systems.

Successful product development requires proper resources. We have an advanced chemistry laboratory and profound expertise in the field of polymers, well-equipped high-voltage and high-current laboratories.

Better economy
Kabeldon cable accessories provide greater safety. This means major savings in the long term, as well as lower costs from simplified routines for purchasing, deliveries and stores.

Routine testing of high voltage cable joints.

Testing in progress in the high voltage laboratory.

Tests of rubber samples in the chemistry laboratory.

We reserve the right to alter the design and range of our products.

Professional training
The technology of cables and their installation is constantly developing.
We offer broad-based training in cable technology and accessories.
Our instructors also take part in our development projects, so you can be sure that they possess access to the latest technology.
We arrange training programmes and practical exercises in the assembly of cable accessories up to 420 kV.
The length of time needed is due to the selection of the training.
All course participants will receive diploma or a training certificate after passing a theoretical and practical test.
If you would like to know more about the courses, contact our training department.

A training course with us gives access to the latest technology.

We reserve the right to alter the design and range of our products.

Standards

Definition of voltages
Cables and cable accessories are classified according to the voltages at which they operate. A rapid survey at standards all over the world shows that the designations are a little different. However, used designation in IEC gives a clear picture of used vocabulary. The voltages normally used in this context are:

U_0 =the rated r.m.s.(root mean square) power-frequency voltage between each conductor and screen or sheath for which cables and accessories are designed.

U =the rated r.m.s power-frequency voltage between two different conductors for which the cables and accessories are designed.

Note This quantity only affects the design of non radial field cables and accessories.

U_m=the maximum r.m.s power-frequency voltage between two different conductors for which the cables and accessories are designed. It is the highest voltage that can be sustained under normal operating conditions at any time and at any point in a system. It excludes temporary voltage variations due to fault conditions and the sudden disconnection of large loads.

Standards and type testing
Electrical components must meet numerous requirements in areas such as functional safety, technical performance, personal safety and so on. For cable accessories, compliance with the quality requirements is checked by type and routine testing. We perform these tests to various standards, both international and national.

These are the standards on which our tests are usually based:

IEC (International Electrotechnical Commission)
An international standard.

EN (European Norm)

Tests in the high voltage laboratory.

HD (Harmonization Document)
These standards were developed by CENELEC for the European countries. The aim is to use the same standards throughout Europe, to eliminate obstacles to trade. In most cases, these standards harmonize with IEC standards. Each European country publishes the standard as its own, and there may be some national deviations and special requirements.

IEEE (The Institute of Electrical and Electronics Engineers)
This standard is mainly used in the USA.

Earlier Swedish standards are being replaced by standards drawn up by CENELEC. For example, Swedish standard SEN 24 14 34 edition 2, 1977 for XLPE-insulated cables is replaced by SS 424 14 45 edition 1, which is identical to HD 628.1 S1 and HD 629.1 S1.

Some customers require special tests that are not included in the usual standards. We are usually able to meet their requirements.

EBR (El Building Rationalisation)
is a Swedish system for the rational planning, construction and maintenance of electricity distribution plants and facilities in the range 0.4 - 145 kV.

We reserve the right to alter the design and range of our products.

Standards

Voltage range U_m 1.2 kV
In this voltage range, the function of cable accessories is to provide mechanical protection and insulation. There is no need for controlling the electrical field.

In the past, there was no international standard, only national standards. CENELEC therefore produced an international standard, HD 623 S1, which is equivalent to Swedish standard, SS 424 14 44.

When the CENELEC standard is adopted in a country, it can be supplemented with one or more national options, for example requirements for impact resistance at low ambient temperature.

Voltage range U_m 7,2-42 kV
IEC: Current standards are IEC 61442, which covers test methods, and IEC 60502-4, which sets out the testing requirements.

IEC contains $U_m \leq 36$ kV.

CENELEC: Current standards are HD 628.1 S1, which covers test methods, and HD 629.1 S1, which sets out the testing requirements. The main difference between IEC and CENELEC is that CENELEC stipulates a longer period of temperature cycling under voltage.

A test conducted in accordance with CENELEC also satisfies the IEC requirements.

Standard HD 629.2 S1 applies to accessories for paper-insulated cables and transition joints.

To include the unusual voltages which occur in certain European countries, CENELEC has included more voltage classes than IEC.

In addition, CENELEC run up to U_m42 kV.

CENELEC voltage classes

U_o	U	U_m
3.6	6	7.2
3.8	6.6	7.2
6	10	12
6.35	11	12
8.7	15	17.5
12	20	24
12.7	22	24
18	30	36
19	33	36
20.8	36	42

IEEE: The currently applicable standards are Std. 48 for terminations covering insulation classes 2.5-765 kV, and Std. 404 for joints rated at 2.5-500 kV. The test voltage for joints is generally lower than for equivalent terminations.

The voltage classes in IEEE are not identical with those in IEC. Some of the definitions also differ slightly between IEEE and IEC. This can make direct comparisons difficult.

Voltage range U_m 52-420 kV
IEC standard 60840 covers cable systems with voltages above 36 kV up to 170 kV. The third edition of the standard now also treats routine testing of cable accessories.

IEC standard 62067 covers cable systems with voltages above 170 kV up to 550 kV. The standard also states methods and requirements for the routine testing of cable accessories.

Both 60840 and 62067 deal with testing of outer protection for buried joints and screen separation kits. These tests are to qualify the electrical performance of the outer protection with special emphasis on watertightness.

IEC voltage classes

U_o	U	U_m
26	45-47	52
36	60-69	72.5
64	110-115	123
76	132-138	145
87	150-161	170
127	220-230	245
160	275-287	300
190	330-345	362
220	380-400	420

We supply cable accessories for various types of cables.

We reserve the right to alter the design and range of our products.

Manufacturing and testing

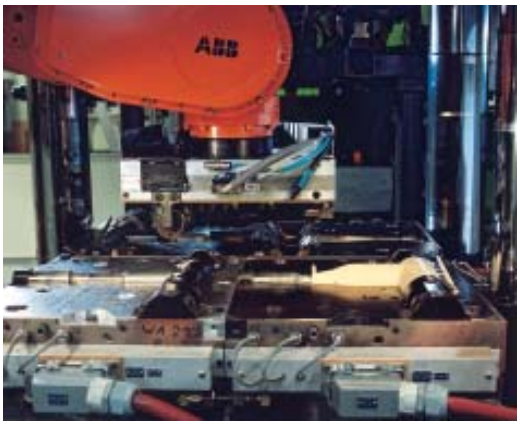

Manufacturing of premoulded connectors takes place in accordance with a unique method, in which different layers are vulcanized together.

The three layers of the joint are vulcanized together in a unique manufacturing process.

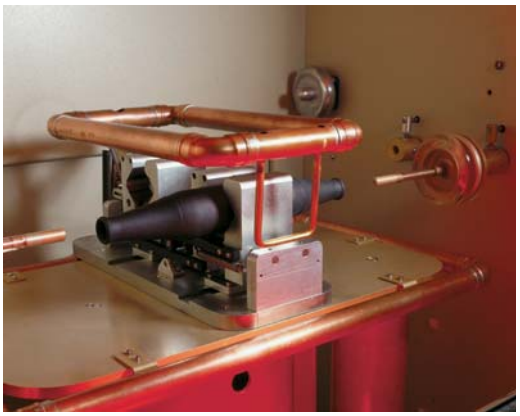

The premoulded cable joints are routine tested after manufacturing.

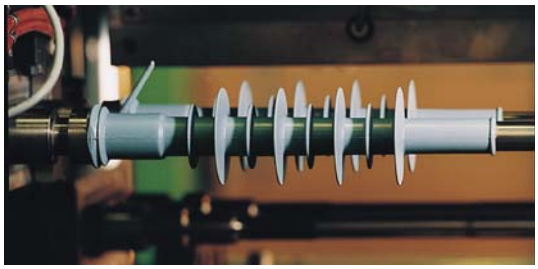

A snapshot of cable termination manufacture.

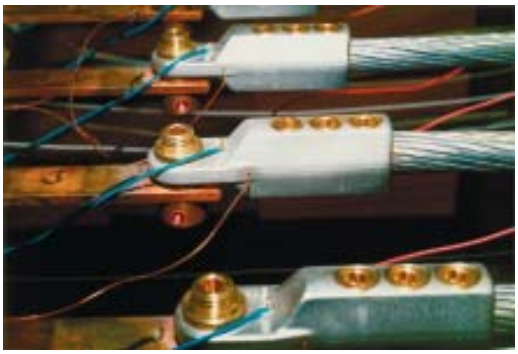

We test and develop electrical connections with reliable screw technique.

Research and development are the basis for manufacturing of our products.

We reserve the right to alter the design and range of our products.

Reference pictures
Cable terminations
APED, APSEA

APED 72 kV, India.

APED 72 kV, Sri Lanka.

APED 36 kV, Australia

APSEA installed on the wallbushings, USA.

APED 72 kV, Port Hudland, the west Australia.

APSEA, Australia.

We reserve the right to alter the design and range of our products.

Reference pictures
Cable termination
APEGA GIS

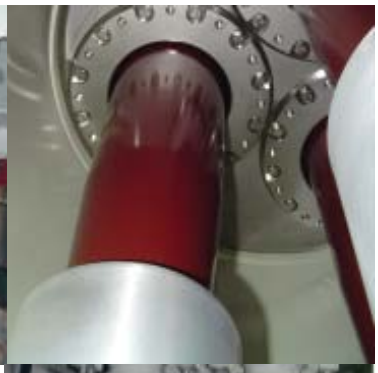

APEGA 170 kV at GIS (gas-insulated switchgear), Taiwan.

APEGA 1703, Malaysia.

APEGA 110 kV at GIS, Finland.

APEGA 170 kV at GIS, Australia.

We reserve the right to alter the design and range of our products.

Reference pictures
Cable termination
APECB

APECB-P 145 kV with composite insulator, Sweden.

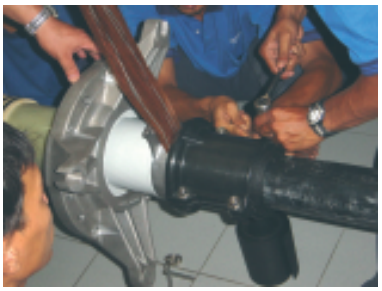

APECB 145 kV with porcelain insulator, high voltage training, Malaysia.

APECB with porcelain insulator, assembled horizontally on the ground before lifted it into place, Greece.

APECB, Greece.

APECB-P 145 kV with composite insulator, Sweden.

APECB-P 145 kV with composite insulator, Sweden.

APECB assembled horizontally on the ground before lifted it into place, Australia.

We reserve the right to alter the design and range of our products.

Reference pictures
Cable termination
APECB 84-420 kV

APECB Baltimore, USA.

Base part and cable clamp.

Stress cone.

Cover, clamp and top bolt.

We reserve the right to alter the design and range of our products.

Reference pictures
Premoulded cable joints
JS 52-123 kV

JS 123 kV, Mexico.

JS 72 kV installation, Sweden.

We reserve the right to alter the design and range of our products.

Reference pictures Prefabricated cable joint SMPGB

SMPGB 170 kV with sheath sectionalizing, Ireland.

SMPGB 145 PAL, Hungary.

SMPGB 170 kV with sheath sectionalizing, Mexico.

SMPGB, Australia.

SMPGB 170 kV with sheath sectionalizing.

Installation tool, RKM 170 for mounting SMPGB on a 170 kV cable.

SMPGB 170 kV, Australia.

We reserve the right to alter the design and range of our products.

Reference pictures
Tape joint
SMX

SMX 72 kV which supply a casino at
Macaus harbour in China with electricity.

SMX 52 kV, Libya.

We reserve the right to alter the design and range of our products.

Reference pictures
Cable distribution cabinets for 12-24 kV
HDC 250 and HDC 630

Installation of HDC 630 at Farsund, Norway.

Töreboda Energi, Mariestad, Sweden.

We reserve the right to alter the design and range of our products.

Reference pictures
Prefabricated cable termination
SOT

SOT 24 kV, Australia.

SOT 24 and 36 kV, Patagonia Argentina.

SOT 24 kV connect switchgear to transformer.

SOT 12 kV at transformer, Sweden.

SOT 24 kV, Sweden.

SOT 12 kV in a switchgear box, Sweden.

SOT 24 kV installed in wind power stations on the east coast of England.

We reserve the right to alter the design and range of our products.

Reference pictures
Prefabricated cable connector
SOC

SOC in Eaton switchgear, Sweden.

SOC 250 A installed on a transformer.

SOC 630 A in ABB SafeRing, Sweden.

SOC 630 A in Holec switchgear, Sweden.

We reserve the right to alter the design and range of our products.

Reference pictures
Prefabricated cable joint SOJ
Transition joint SMTXB

SOJ 24 kV, Portugal.

SOJ 12 kV, China.

SOJ is used for jointing of the winding in a Powerformer, Sweden.

SOJ with armouring kit, ARM

SOJ, Malaysia.

SOJ 24 kV, with screw technique, Australia.

SOJ 12 kV on a cable with copper tape screen, China.

Transition joints SMTXB 12 kV, The Netherlands.

We reserve the right to alter the design and range of our products.

Table of contents
Cable accessories ≤ 1 kV

Page No.

Introduction 23
Cable joint, cast resin 24
Cable joint, branch 25
Cable joint, heat-shrink 26
Cable joint, taped 27
Cable termination 28
Protective hood 30
Prefabricated cable connection 31

We reserve the right to alter the design and range of our products.

Introduction
Cable accessories ≤ 1 kV

The most important task of the accessories is to create a safe electrical connection, insulation and provide mechanical protection.

The product range includes accessories designed on different principles with different properties.

Accessories which utilize tape technology are simple to use, flexible and unaffected by the dimensions of the cable.

Cable accessories which utilize heat-shrink technology offer a simple alternative.

Cast resin products are the obvious choice in slightly more challenging environments. The robust joint is able to cope with a depth of water of 10 m, for example, and can be used for both power and control cables.

Cast resin type B is non-hazardous according to the Swedish Occupational Safety and Health Act's stipulated to marginal value for non-hazardous joint.

Cast resin joint type SMARTA-B.

Protective hood type LPH.

Cast resin branch joint type SAGA.

Tape joint type SMILA / SMULA.

Protective hood type LXAC.

Heat-shrink joint SMKC

We reserve the right to alter the design and range of our products.

- Robust
- Approved to 10 metres water depth

Cable joint, cast resin for plastic and paper-insulated cable, and control cable SMARTA and SMARTA B

Use:
For jointing 1 kV plastic and paper-insulated cable for 3-, 4-, 5-core cables and the transition between plastic and paper-insulated cables and communication cables. Can be used in 10 metres water depth.

Standards:
SMARTA and SMARTA B meet the requirements of:
– SS 424 14 44 Edition 1
– EBR KJ 24:89

Design:
The joint consists of a transparent, casting mould with flexible sealing rings between the casting mould and the cable. Compounding cast resin and hardener are mixed in a sealed bag. When filling up the joint; the colder cast resin the longer hardening time. SMARTA B ought not to be used at temprature lower than 5° C, and SMARTA not lower than -10° C.
After hardening the joint become resistant.

When jointing paper-insulated cable, and at the transition between paper and plastic cable, accessory kit PPC must be used.

Note that, when jointing plastic-insulated to paper-insulated cable, connectors with a partition must be used.

The joint is also an excellent joint to use when jointing cables with an integrated tube for opto fibre, which must be jointed without heating. The material for jointing the opto tube is not included.

To be ordered separately:
– Connectors
– PPC (see below)

Designation	Conductor cross section Cu	Conductor cross section Al	Control cable max number of cores with individual screen	Control cable max number of cores without individual screen	Cable diameter	Casting mould Length	Casting mould Diameter	Weight
	mm²				mm	mm		kg/item
SMARTA 10-5 B	2.5-10	–	14	27	5-27	240	35	0.8
SMARTA 11-5 B	6-16	–	27	39	15-30	340	40	1.2
SMARTA 12 B	25-70	25-50	91	–	25-50	540	72	3.6
SMARTA 13 B	95-150	70-150	–	–	30-65	660	96	7.6
SMARTA 14 B	185-240	185-240	–	–	35-70	840	105	10.5
SMARTA 10-5	2.5-10	–	14	27	5-27	240	35	0.8
SMARTA 11-5	6-16	–	27	39	15-30	340	40	1.2
SMARTA 12	25-70	25-50	91	–	25-50	540	72	3.6
SMARTA 13	95-150	70-150	–	–	30-65	660	96	7.6
SMARTA 14	185-240	185-240	–	–	35-70	840	105	10.5

To be ordered separately:

Accessory kit	Used for	Weight kg/item
PPC 11	SMARTA 10-5 / SMARTA 11-5 / SMARTA 10-5 B / SMARTA 11-5 B	0.2
PPC 12	SMARTA 12 / SMARTA 12 B	0.3
PPC 13	SMARTA 13 / SMARTA 13 B	0.4
PPC 14	SMARTA 14 / SMARTA 14 B	0.5

We reserve the right to alter the design and range of our products.

- Robust
- Approved to 10 metres water depth
- SAGA 11 Y B contains non-hazardous cast resin according to the Swedish National Board of Occupational Safety and Health Act for marginal value

Cable joint, branch for plastic-insulated cables SAGA 11 Y, SAGA 11 Y B

Use:
Branching of 1 kV plastic-insulated 3- and 4-core cables. Can be used in 10 metres water depth.

Standards:
SAGA 11 Y B meets the requirements of the working environment:
The Occupational Safety and Health Act's provisions:
– AFS 1996:4.

SAGA 11 Y and SAGA 11 Y B meets the requirements of:
– SS 424 14 44 Edition 1
– EBR KJ 24:89

Design:
The joint consists of a transparent, casting mould with flexible sealing rings between the casting mould and the cable. When filling up the joint; the colder cast resin the longer hardening time. SAGA 11 Y B ought not to be used at temprature lower than 5° C, and SAGA 11 Y not lower than -10° C. Compounding cast resin and hardener are mixed in a sealed bag. After hardening the joint become resistant.
Branching takes place with the help of clamps, which penetrate the insulation on the main cable. The clamps, which are included in the kit, are tightened with a torque wrench.

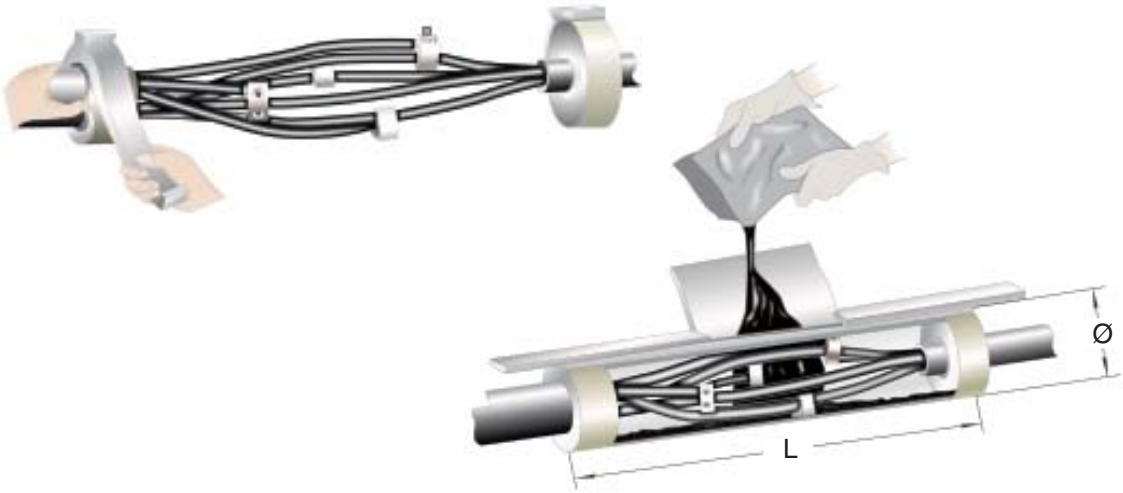

Designation	Conductor cross section		Diameter		Dimensions		Weight
	Main cable	Branch cable	Main cable	Branch cable	L	Ø	
	mm²		mm		mm		kg/item
SAGA 11 Y	16-50	10-50	15-30	5-25	500	96	4.5
SAGA 11 Y B	16-50	10-50	15-30	5-25	500	96	4.5

We reserve the right to alter the design and range of our products.

• Easy installation

Cable joint, heat-shrink for plastic-insulated cables SMKC

Use:
For jointing 1 kV plastic-insulated cables with 3-, 4- and 5-cores, with or without screen.

Standards:
Meets the requirements of:
– SS 424 14 44 Edition 1
– EBR KJ 24:89

Design:
SMKC 11-5 contains one outer and five inner sleeves. SMKC 12-14 contain one outer and four inner sleeves.
The sleeves are made of cross-linked polyethylene, coated internally with a hot-melt adhesive and are installed with heat.

To be ordered separately:
– Connectors

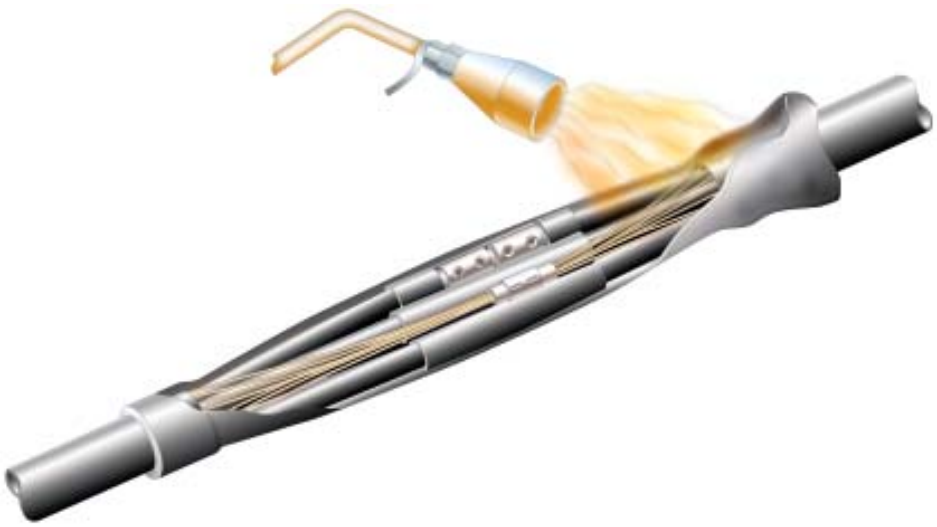

Designation	Conductor cross section plastic cable			Outer sleeve before/after heat shrinkage		Weight
	Al	Cu	Al/Cu	Length	Ø max/min	
	mm²			mm		kg/item
SMKC 11-5	–	2.5-16	–	380	34/14	0.2
SMKC 12	25-50	25-70	50/25	550	66/20	0.4
SMKC 13	70-150	95-150	150/70-95	790	83/26	0.5
SMKC 14	185-240	185-240	240/120-150	950	110/40	0.9

We reserve the right to alter the design and range of our products.

Cable joint, tape for plastic-insulated cables SMILA and SMULA

Use:
For jointing 1 kV plastic-insulated cables with 3-, 4- and 5-cores, with or without screen.

SMILA is used for jointing cables with screen. Otherwise SMULA is used.

Standards:
Meets the requirements of:
– SS 424 14 44 Edition 1
– EBR KJ 24:89

Design:
The kit contains insulating vulcanizing tape and electrical tape. SMILA also includes a copper net. Insulating vulcanizing tape is used for insulation of the connectors. The stripped cable sheaths and electrical tape are used as outer protection.

The joints are packed in kits. Two SMILA 12 or SMULA 12 kits are used to joint 70-150 mm², and three kits are used for 185-240 mm² cables.

To be ordered separately:
– Connectors

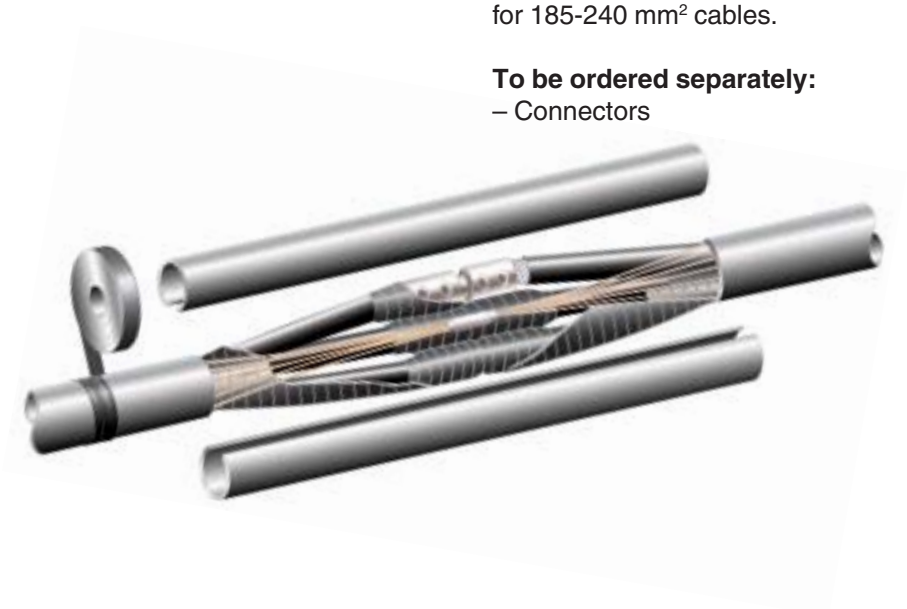

Designation	Conductor cross section Al	Cu	Cable joint Length	Weigh
	mm²		mm	kg/item
SMILA 11	–	2.5-16	420	0.2
SMILA 12	25-50	25-70	570	0.3
For larger cable cross sections, use SMILA 12 as below.				
SMILA 12 (two)	70-150	95-150	770	0.6
SMILA 12 (three)	185-240	185-240	920	0.9
SMULA 11	–	2.5-16	420	0.1
SMULA 12	25-50	25-70	570	0.3
For larger cable cross sections, use SMULA 12 as below.				
SMULA 12 (two)	70-150	95-150	770	0.6
SMULA 12 (three)	185-240	185-240	920	0.9

We reserve the right to alter the design and range of our products.

- Weather-proof
- Oil-resistant
- Flexible
- UV-resistant

Cable termination Protective hood for plastic-insulated cables LPH

Use:
Termination outdoors for 1 kV plastic-insulated underground cables with 3-, 4- or 5-core, 2.5-95 mm²

Standards:
Meets the requirements of:
– SEN 24 14 34

Design:
The cable termination consists of a hood made of weather-proof and oil-resistant rubber. The cable cores are bent downwards and fixed with tape before the hood is pushed on. Cable cores can be protected against UV-radiation by IS insulating hose.

IS
Insulating hose for plastic cables, overhead cables or for connection to aerial bundled cables. Meets the requirements of SEN 24 21 11 and is UV- and cold-resistant.

Designation	Conductor cross section			Internal diameter	Internal height	Weight
	3-core	4-core	5-core			
	mm²			mm	mm	kg/item
LPH 2532	16	10	–	30	83	0.1
LPH 4052	50	35	10	49	137	0.1
LPH 6070	95	70	16	67	176	0.3
LPH 70	–	95	–	68	175	0.3

To be ordered separately:

Designation	Conductor cross section mm²	Thickness mm	Length m/roll	Weight kg/roll
IS 16	2.5-16	0.7	25	0.7
IS 50	25-50	1.0	25	1.5
IS 95	70-95	1.2	25	2.3

We reserve the right to alter the design and range of our products.

- Weather-proof
- Oil-resistant
- Impact resisting
- UV-resistant

Cable termination Protective hood for plastic-insulated cable LXAC

Use:
Termination outdoors for 1 kV plastic-insulated underground cable, 2-, 3- or 4-core cables 2.5-35 mm².

Standards:
Meets the requirements of:
– SEN 24 14 34

Design:
The cable termination consists of a bushing and hood made from impact-resistant black polyethylene. The cable cores are bent downwards and pushed into grooves in the bushing before the hood is pushed on. Cable cores can be protected against UV-radiation by IS insulating hose.

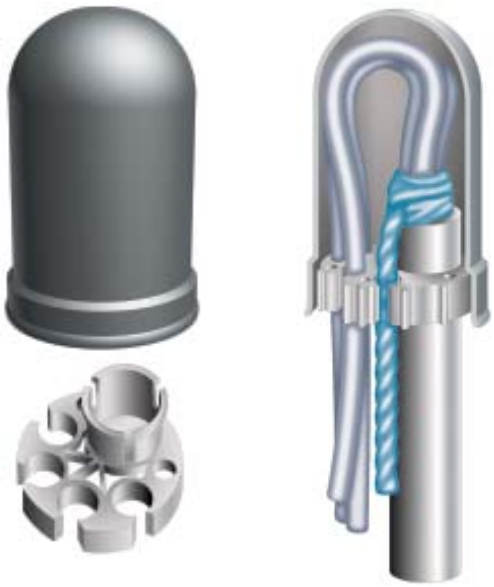

IS
Insulating hose for plastic cables, overhead cables or for connection to aerial bundled cables. Meets the requirements of SEN 24 21 11 and is UV- and cold-resistant.

Designation	Conductor cross section polymeric cable 3-, and 4-core mm²	Max cable diameter mm	External diameter Ø mm	Height mm	Weight kg/item
LXAC 116	16	27	60	100	0.1
LXAC 135	35	31	75	125	0.1

To be ordered separately:

Designation	Conductor cross section mm²	Thickness mm	Length m/roll	Weight kg/roll
IS 16	2.5-16	0.7	25	0.7
IS 50	25-50	1.0	25	1.5

We reserve the right to alter the design and range of our products.

- UV-resistant
- Double insulation

Protective Hood Connection protection for plastic-insulated cable KAL

Use:
Enclosed connection protection for transformer bushings 1 kV.

Standards:
Electrical breakdown strength > 40 kV

Design:
KAL is made from UV-resistant PVC latex and consists of an inner yellow and an outer black layer.

These layers provide double insulation, at the same time as the inner yellow layer functions as a warning signal in the event of wear or damage to the protection.

KAL is available in two sizes depending on the diameter of the bushing. Each kit includes three hoods.

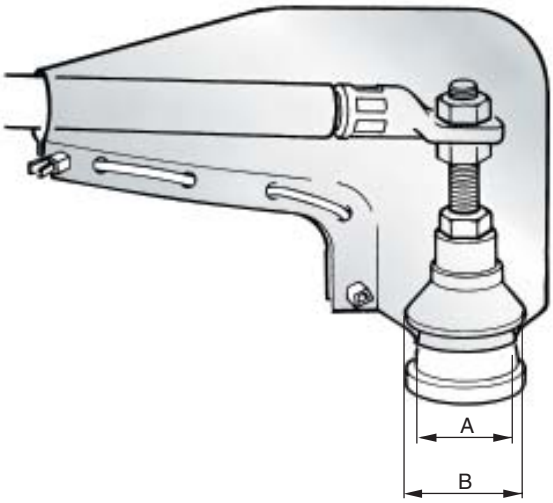

Designation	Max cable diameter mm	Max bushing diameter A mm	Max bushing diameter B mm	Weight kg/kit
KAL 11	15	35	50	0.70
KAL 12	20	50	75	1.25

We reserve the right to alter the design and range of our products.

- Dimensioned according to the cable loading and short-circuit data

Cable connection , prefabricated AK-ADAS

Use:
For the extension of Al cable, for example in conjunction with connection in cable distribution cabinets, service distribution boards and switchgears. Dimensioned in accordance with the cable loading and short-circuit data.

Standards:
Meets the requirements of:
– SEN 24 50 10 Edition 1
– SEN 24 50 12 Edition 1

Design:
Flexible XLPE-insulated Cu conductor compressed onto a prefabricated Al/Cu cable connection. The aluminium part is designed for crimping with the Elpress system. The length of all the connectors are 700 mm.

Designation	Fits aluminium conductor cross section mm²	Conductor cross section of connector mm²	Weight kg/kit
AK-ADAS 5025-7	50	25	0.2
AK-ADAS 7035-7	70	35	0.3
AK-ADAS 9550-7	95	50	0.5
AK-ADAS 12070-7	120	70	0.5
AK-ADAS 15070-7	150	70	0.6
AK-ADAS 185120-7	185	120	0.9
AK-ADAS 240120-7	240	120	1.0

We reserve the right to alter the design and range of our products.

Table of contents
Cable accessories 12-36 kV

Page No.

Introduction cable accessories 12-36 kV 34

Cable accessories for XLPE-insulated cables

Quick guide to choosing cable accessories for XLPE-insulated cable 35
Dimensional drawings for installation of cable terminations 36
Cable termination with resistive/refractive field control 10-36 kV, SOT 37
Cable termination with geometric field control 12-36 kV, APIT, APSTA 41
Cable connector, prefabricated, screened separable 12-24 kV, SOC 44
Cable connector, insulated 12-24 kV, KAP 50
Cable joint with geometric field control,12-24 kV, SOJ 54
Cable joint resistive/refractive field control, tape 12-36 kV, SMXB 60
Cable distribution cabinet for branching 12-24 kV, HDC 63
Screen separation kit, PSSK, PSSK-E, PSST 67
Branch seal kit, TSH 68
Earthing kits for cable terminations, JXT, JSA 69
Screen connection for cable joints, JSA 70
Armouring kit, ARM 71
Connectors 72

Cable accessories for paper-insulated cables

Cable termination 12 kV, OTIA 74
Cable joint and repair joints 12 kV, SMTD 76
Cable joint, transition 12 kV, SMTXB 78
Cable joint, transition 24-36 kV, SMTXD 79
Cable joints 24-52 kV, SMTA and SMTPA 80
Dimensional drawings, SMT 81
Spring-loaded gaskets 82
Accessories for joints and transition joints 83

General accessories

Bird protection 85
Tapes 86
Other accessories 87
Tools 89

We reserve the right to alter the design and range of our products.

Introduction
Cable accessories 12-36 kV

Kabeldon cable accessories for 12-36 kV are characterized by simple solutions with a reliable function. Long experience and continuous product development enable us to offer products that meet future requirements for reliable and dependable systems.

At the time when XLPE cable was introduced at the start of the 1960s, we already appreciated the importance of the cable accessories having a constant, active pressure over the cable, in this way following the physical changes in the cable. The solution at the time was to use tapes with different properties. Our patented field-control material and the first prefabricated products were introduced in the 1970s. Prefabricated product technology has since been a guiding force for our product development. Our current range

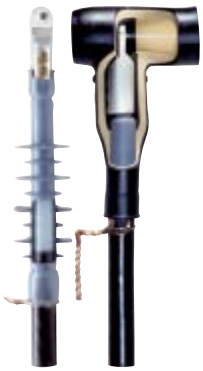

Cable accessories with four important functions: control of electrical fields, control of creepage currents, moisture barriers and mechanical protection.

includes cable joints, cable terminations and screened separtable connectors in line with this concept. The fact that the products are *prefabricated* means that they are manufactured in a single piece and that important functions such as electrical field-control, insulation and sealing are already built in at the factory. The use of flexible materials gives an *active pressure,* which follows variations in the cable under loading. Manufacturing the products from soft

Easy and safe installation with products from ABB Kabeldon.

rubber also means that fewer sizes are required to cope with different cable dimensions. All of this, in combination with the screw technology that we use in our cable connectors and cable lugs, gives a reliable and dependable system.

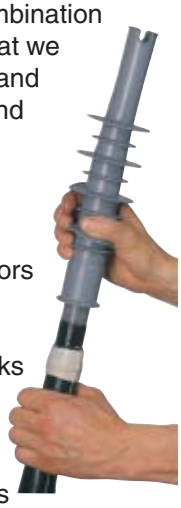

More than one million prefabricated cable joints, cable terminations and screened separable connectors have already been installed by satisfied customers in electricity distribution networks all over the world. Our cable terminations and screened separable connectors are also purchased by customers who manufacture switchgears and other installations.

In addition to the products presented in this catalogue, we offer specially adapted products and solutions for different markets and cables and a range of cable preparation tools. Please do not hesitate to contact us if you have any other needs and queries.

We reserve the right to alter the design and range of our products.

Quick guide to choosing cable accessories for XLPE-insulated cables 12-36 kV

The kits shown in this section of the catalogue can be used on cables with copper wire screen, as described.

For other types of screen, the accessories must be adapted as follows:

3-core cables with copper tape screen and armouring	Three 1-core cables with Al foil screen
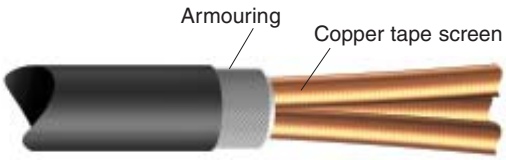	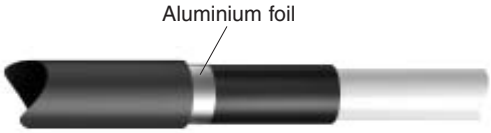
Suitable cable joints, terminations and screened separable connectors are available for this cable type. Contact us for information.	**Indoor termination** 1.Termination type SOT — Page 37-40 2.Earthing kit type JSA — Page 69
	Outdoor termination 1.Termination type SOT-31 — Page 38-40 2.Earthing kit type JSA — Page 69
	Screened separable connector 1.Connection type SOC — Page 44-49 2.Earthing kit type JSA — Page 69
	Insulated connector 1.Connection type KAP — Page 50 2.Earthing kit type JSA — Page 69
	Prefabricated joint 1.Three joints type SOJ-1 — Page 54 2.Screen connection kit type JSA 14-16 — Page 70
Taped joint 1.Joint type SMXB -3 — Page 60 2.Screen connection kit type JSA 10-13 — Page 70 3.Armouring kit type ARM — Page 71	**Taped joint** 1.Joint type SMXB -3 — Page 60 2.Screen connection kit type JSA 14-16 — Page 70

We reserve the right to alter the design and range of our products.

Dimensional drawings for installation of cable termination

All dimensions in mm

Minimum air gap

Max voltage kV	Indoor			Outdoor	
	phase to earth A	phase to phase B	phase to phase C	phase to earth A	phase to phase B
10	90	90	10	130	130
12	120	120	10	160	160
24	220	250	30	270	270
36	320	370	50	380	380

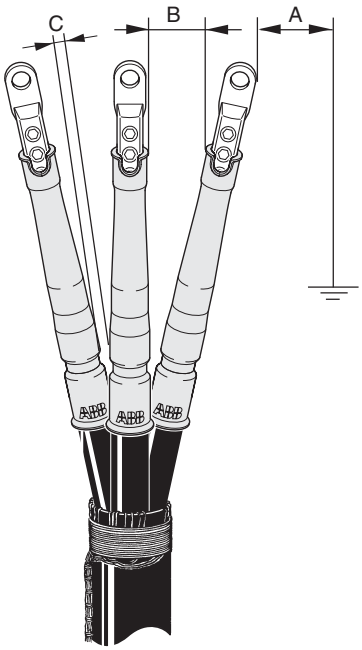

Minimum air gap between cores in parallel

	10 kV	12 kV	24 kV	36 kV
C	10 mm	10 mm	30 mm	50 mm

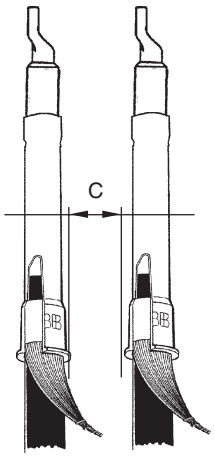

We reserve the right to alter the design and range of our products.

Cable termination indoor, prefabricated SOT 10 kV

- Cold-applied
- Can be used in small spaces
- No special tools
- Prefabricated for easy and safe installation
- Minimal cable stripping
- Active pressure
- Few components
- Long shelf life

Use:
Prefabricated cable termination for XLPE-insulated cables with Al or Cu conductor for 6.6/10 kV, indoors.

Standards:
Meets the requirements of:
CENELEC
– HD 628.1 S1
– HD 629.1 S1

Design:
Prefabricated cable termination; rubber sleeve with integrated field control.

It can also be installed in an indoor humid environment.

The length of the termination is approx. 145 mm which also makes it suitable for mounting in small spaces.

The terminations are supplied in kits for 3-phase cables.

Kits with outdoor terminations for 3-core cables include crutch seal and protective hoses of heat shrink.

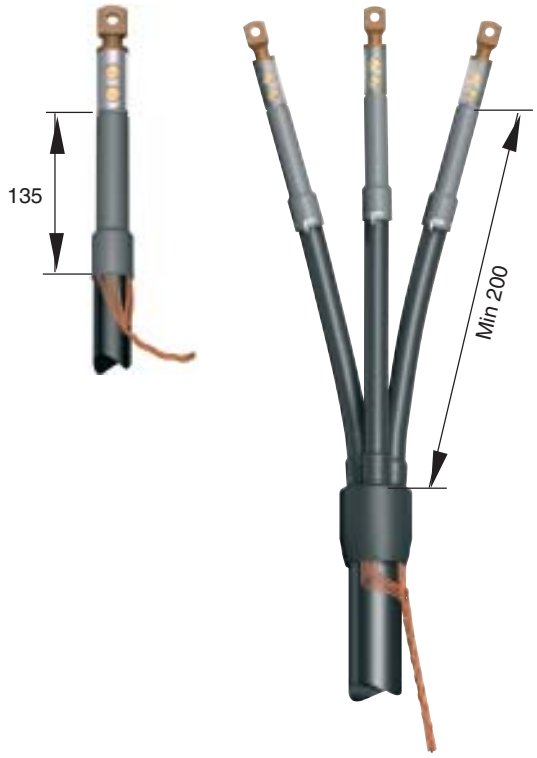

Designation	XLPE-Ø mm	Conductor cross section mm²	Weight kg/kit
3-core / three 1-core			
SOT 101-3	10.5-15	10-35	0.2
SOT 102-3	12.9-25.8	50-185	0.2
SOT 103-3	21.4-34.9	185- 500	0.2

We reserve the right to alter the design and range of our products.

- Cold-applied
- No special tools
- Prefabricated for easy and safe installation
- Minimal cable stripping
- Active pressure
- Few components
- Long shelf life

Cable termination indoor and outdoor, prefabricated SOT 12-36 kV

Use:
Prefabricated termination for XLPE-insulated cable 1- or 3-core with Al or Cu conductors for 12-36 kV.

Standard:
Meets the requirements of:
CENELEC
– HD 628.1 S1
– HD 629.1 S1
– IEEE 48 1996*

Design:
Prefabricated cable termination made of rubber with integrated field control and top sealing. The outdoor variant has permanent sheds which give a prolonged creepage distance.

The indoor termination can also be installed in a humid indoor environment.

The terminations are supplied in kits for 1- or 3-phase cable.
Kits with outdoor terminations for 3-core cables include crutch seal and protective hoses of heat shrink.

SOT 1- and 3-core indoor.

SOT 1- and 3-core outdoor.

Designation	Weight kg/kit	Designation	Weight kg/kit	XLPE-Ø mm	Conductor cross section 12 kV mm²	24 kV mm²	36 kV mm²
Indoor termination 3-core / 3 x 1-core		Indoor termination 1-phase kit					
SOT 241 A-3	0.60	**SOT 241 A**	0.20	11-15	10-35	10	–
SOT 241-3	0.60	**SOT 241**	0.19	15-28	50-185	25-120	–
SOT 242-3	0.70	**SOT 242**	0.23	25-39	240-400	150-400	–
SOT 242 B-3	0.90	**SOT 242 B**	0.30	38-54	500-630**	500-630**	–
Outdoor termination incl. crutch seal for 3-core		Outdoor termination 1-phase kit					
SOT 243 A-3	1.90	**SOT 243 A**	0.31	11-15	10-35	10	
SOT 243-3	1.80	–	–	15-24	50-120	25-70	–
SOT 244-3	2.00	–	–	22-33	150-300	95-240	–
SOT 245-3	2.50	–	–	31-40	400-500	300-400	–
Outdoor termination 3 x 1-core		Outdoor termination 1-phase kit					
SOT 243-31	0.80	**SOT 243**	0.27	15-24	50-120	25-70	–
SOT 244-31	0.90	**SOT 244**	0.30	22-33	150-300	95-240	–
SOT 245-31	1.11	**SOT 245**	0.38	31-40	400-500	300-400	–
SOT 246-31	1.50	**SOT 246**	0.51	38-54	500-630**	500-630**	–
Indoor/outdoor termination 3 x1-core		Indoor/outdoor termination 1-phase kit					
SOT 361-31	1.40	**SOT 361**	0.42	26-39	–	–	95-300
SOT 362-31	1.60	**SOT 362**	0.52	38-54	–	–	400-630**

* Is valid for outdoor terminations (SOT 243 A-SOT 246).
** Can be mounted on cables with 800 and 1000 mm², by using silicone rubber tape IA 2342 as top seal, see page 86.
For selecting accessories see page 40.

We reserve the right to alter the design and range of our products.

Kits complete with screw cable lug

Cable termination including bi-metallic
screw cable lug for Al and Cu conductors.
The cable lug is equipped with shear off bolts.

Designation	Weight kg/kit	Designation	Weight kg/kit	Cable cross section 12 kV mm²	Cable cross section 24 kV mm²
1-core indoor		3 -core / 3 x 1-core indoor			
SOT 241A S1	0.35	**SOT 241A-3 S1**	1.05	16 - 35	16
SOT 241 S1	0.34	**SOT 241-3 S1**	1.02	50 - 70	25 - 70
SOT 241 S2	0.44	**SOT 241-3 S2**	1.32	95 - 150	95 - 120
SOT 241 S3	0.59	**SOT 241-3 S3**	1.50	185	–
SOT 242 S2	0.48	**SOT 242-3 S2**	1.44	–	150
SOT 242 S3	0.63	**SOT 242-3 S3**	1.89	240	185 - 240
SOT 242 S4	0.98	**SOT 242-3 S4**	2.94	300 - 400	300 - 400
SOT 242B S5	1.78	**SOT 242B-3 S5**	5.25	500 - 630	500 - 630
1-core outdoor		3-core outdoor			
SOT 243A S1	0.46	**SOT 243A-3 S1**	1.56	16 - 35	16
SOT 243 S1	0.42	**SOT 243-3 S1**	1.42	50 - 70	25 - 70
SOT 243 S2	0.52	**SOT 243-3 S2**	1.52	95 - 120	–
SOT 244 S2	0.55	**SOT 244-3 S2**	1.65	150	95 - 150
SOT 244 S3	0.70	**SOT 244-3 S3**	1.80	185 - 240	185 - 240
SOT 244 S4	1.05	**SOT 244-3 S4**	2.15	300	–
SOT 245 S4	1.13	**SOT 245-3 S4**	2.51	400	300 - 400
SOT 245 S5	1.83	**SOT 245-3 S5**	3.15	500	–
SOT 246 S5	1.96	–	–	630	500 - 630
3 x 1-core outdoor					
SOT 243 A-31 S1			1.38	16-35	16
SOT 243-31 S1			1.26	50-70	25-70
SOT 243-31 S2			1.56	95 - 120	–
SOT 244-31 S2			1.65	150	95 - 150
SOT 244-31 S3			2.10	185 - 240	185 - 240
SOT 244-31 S4			3.15	300	–
SOT 245-31 S4			3.40	400	300 - 400
SOT 245-31 S5			5.50	500	–
SOT 246-31 S5			5.90	630	500 - 630
1-core indoor/outdoor				36 kV	
SOT 361 S2			0.67	95 - 150	–
SOT 361 S3			0.82	185 - 240	–
SOT 361 S4			1.17	300	–
SOT 362 S4			1.27	400	–
SOT 362 S5			1.97	500 - 630	–
3 x 1-core indoor/outdoor				36 kV	
SOT 361-31 S2			2.10	95 - 150	–
SOT 361-31 S3			2.46	185 - 240	–
SOT 361-31 S4			3.50	300	–
SOT 362-31 S4			3.80	400	–
SOT 362-31 S5			5.95	500 - 630	–

We reserve the right to alter the design and range of our products.

Dimensional drawings and accessories SOT

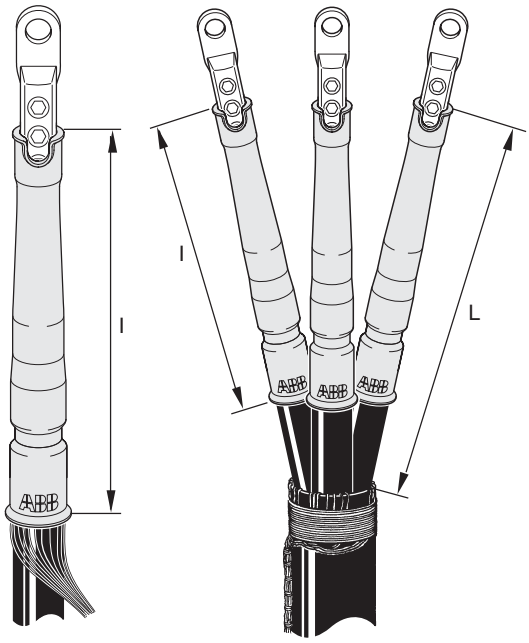

SOT, indoor

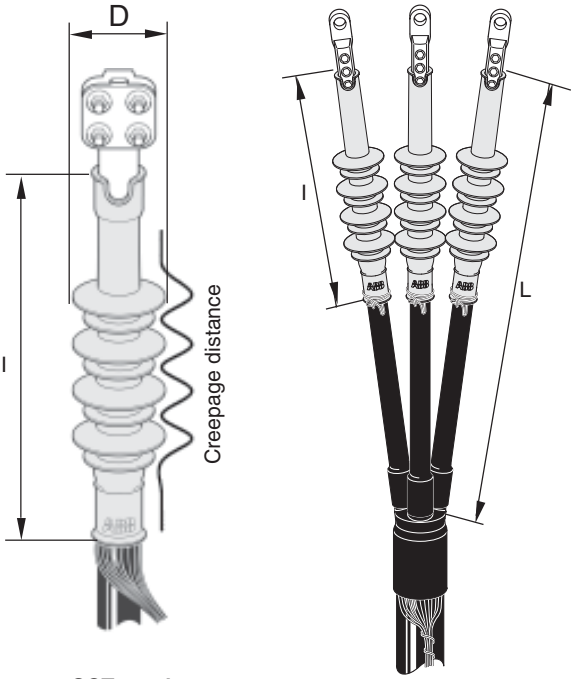

SOT, outdoor

Designation	I	L	D	Creepage distance
	mm			
SOT 241/242/242 B	235	min 300	–	–
SOT 243/244/245	330	min 430	70/75/80	min 520
SOT 246/361/362	390	min 500	80/85	min 725

To be ordered separately:

Designation	Description	See page
SKSA, SKSB	Cable lug	73
UKR	Universal clamp for fastening cable to a pole, etc.	123
JSA, JXT	Earthing kits when the cable does not have a Cu wire screen	69
FK	Overhead line clamp	72
PSSK, PSST	Screen separation kit (indoor)	67

We reserve the right to alter the design and range of our products.

- Cold-applied
- No special tools
- Robust
- Minimal cable stripping
- Active pressure
- Long shelf life

Cable termination for extremely high demands indoor, prefabricated APIT 12-36 kV

Use:
Prefabricated cable termination for XLPE-insulated 1- or 3-core cables with Al or Cu conductors 12-36 kV.

The termination is designed to withstand extremely high demands, for example in networks where very high frequencies occure, or in very polluted areas.

Standards:
Meets the requirement of:
– CENELEC HD 629.1
– SS 424 14 17
– VDE 0278
– IEEE 48-1975

Design:
The termination is made of rubber with an integrated deflector as geometrical field control. The deflector is connected to the cable's conductive layer with a conductive rubber pad. The pad and cable's conductive layer are protected by tapes.

Cable lugs and crutch seal for 3-core cable are must be ordered separately.

Designation	XLPE Ø mm	12 kV Conductor cross section mm²	12 kV Length L mm	24 kV Conductor cross section mm²	24 kV Length L mm	36 kV Conductor cross section mm²	36 kV Length L mm	Weight kg/kit
APIT 1	13.7-15.9	25-35	230	10	230	–	230	1.6
APIT 2	15.8-18.8	50-70	230	16-25	230	–	230	1.6
APIT 3	18.1-21.5	95	230	35-50	230	10	230	1.6
APIT 4	20.7-24.6	120-150	230	70-95	230	16-35	230	1.6
APIT 5	23.9-28.5	185-240	230	120-150	230	50-95	230	1.5
APIT 6	28.4-33.8	300-400	230	185-300	230	95-185	230	1.3
APIT 7	33.3-36.3	500	150	300	150	185-300	150	2.8
APIT 8	35.7-39.7	500-630	150	400-500	150	300-400	150	2.8
APIT 9	39.3-43.1	630-800	150	500-630	150	400-500	150	2.5
APIT 10	42.5-48.1	800	150	630	150	500-630	150	2.5
APIT 11	48.0-54.0	800-1000	150	630-1000	150	630-800	150	2.5

To be ordered separately:

Designation	Description	See page
SKSA, SKSB	Cable lug	73
PSSK, PSST	Screen separation kit	67
JSA, JXT	Earthing kit when the cable does not have Cu-wire screen	69
UKR	Universal clamp	123

We reserve the right to alter the design and range of our products.

- Cold-applied
- No special tools
- Robust
- Minimal cable stripping
- Active pressure
- Long shelf life

Cable termination for extremely high demands outdoor, prefabricated APSTA 12-36 kV

Use:
Prefabricated termination for XLPE-insulated 1- or 3-core cable with Al or Cu conductor, 12-36 kV.

The termination is designed to withstand extremely high demands, for example in networks where very high frequencies occure, or in very polluted areas.

Standards:
Meets the requirements of:
– SEN 24 14 34
– SS 424 14 17
– VDE 0278
– IEEE 48-1975

Design:
The cable termination is made of rubber with integrated geometric field control in the stress cone.
The stress cone is connected to the outer conductive surface with a conductive rubber tape that is provided with a vulcanized tape. Sheds that are mounted outside the stress cone and also the top cap* that insulate towards the cable lug* will ensure the right creepage distance and withstand external factors such as humidity.

Crutch seal for 3-core cable must be ordered separately.

Designation	Voltage kV	XLPE-diameter Ø mm	Conductor cross section mm²	Length L mm	Creepage distance mm	Top cap type	Weight kg/kit
APSTA 121 U	12	13.7-15.9	25-35	285	390	TH	3.7
APSTA 122 U	12	15.8-18.8	50-70	285	390	TH	3.7
APSTA 123 U	12	18.1-21.5	95	285	390	TH	3.7
APSTA 124 U	12	20.7-24.6	120-150	285	390	TH	3.6
APSTA 125 U	12	23.9-28.5	185-240	285	390	TH	3.6
APSTA 126 U	12	28.4-33.8	300-400	285	390	TH	3.5
APSTA 127 U	12	33.3-36.3	500	250	345	THS	4.3
APSTA 128 U	12	35.7-39.7	500-630	250	345	THS	4.0
APSTA 129 U	12	39.3-43.1	630-800	250	345	THS	4.0
APSTA 1210 U	12	42.5-48.1	800	250	345	THS	3.9
APSTA 1211 U	12	48.0-54.0	800-1000	305	470	THSA	4.9
APSTA 241 U	24	13.7-15.9	10	360	590	TH	4.4
APSTA 242 U	24	15.8-18.8	16-25	360	590	TH	4.4
APSTA 243 U	24	18.1-21.5	35-50	360	590	TH	4.4
APSTA 244 U	24	20.7-24.6	70-95	360	590	TH	4.3
APSTA 245 U	24	23.9-28.5	120-150	360	590	TH	4.3
APSTA 246 U	24	28.4-33.8	185-300	360	590	TH	4.2
APSTA 247 U	24	33.3-36.3	300	360	610	THS	7.5
APSTA 248 U	24	35.7-39.7	400-500	360	610	THS	7.0
APSTA 249 U	24	39.3-43.1	500-630	360	610	THS	6.5
APSTA 2410 U	24	42.5-48.1	630	360	610	THS	6.5
APSTA 2411 U	24	48.0-54.0	630-1000	415	610	THSA	6.9
APSTA 364 U	36	20.7-24.6	16-25	435	790	TH	6.2
APSTA 365 U	36	23.9-28.5	50-95	435	790	TH	6.2
APSTA 366 U	36	28.4-33.8	95-185	435	790	TH	6.0
APSTA 367 U	36	33.3-36.3	185-300	470	875	THS	9.3
APSTA 368 U	36	35.7-39.7	300-400	470	875	THS	8.8
APSTA 369 U	36	39.3-43.1	400-500	470	875	THS	8.4
APSTA 3610 U	36	42.5-48.1	500-630	460	875	THS	8.4
APSTA 3611 U	36	48.0-54.0	630-800	525	1000	THSA	8.9

* To be ordered separately.

We reserve the right to alter the design and range of our products.

Accessories
APSTA

Top caps are available with the following size of top hole	
Ø Top hole	Top cap designation
36	TH 36
28	THS 28
37	THS 37
47	THS 47
60	THS 60
28	THSA 28
37	THSA 37
47	THSA 47
60	THSA 60

Select top cap with a hole that matches the outer diameter of the available cable lug.

Example:
Cable: Three 1-core 12 kV, 240 mm² with Cu wire screen
Outdoor choice: APSTA 125 U + 3 pcs TH 36

Top cap, TH, THS and THSA

To be ordered separately:

Designation	Description	See page
TH, THS, THSA	Top cap	43
SKSA, SKSB	Cable lug	73
JSA, JXT	Earthing kit when the cable has no Cu-wire screen	69
FK	Overhead line clamp	72
UKR	Universal clamp	123

We reserve the right to alter the design and range of our products.

- Cold-applied
- No special tools
- Prefabricated for simple and safe installation
- Minimal cable stripping
- Active pressure
- Complete kits
- Few sizes
- Long shelf life

Cable connectors, prefabricated screened separable 250 A SOC 250 TP, SOC 250 STP 12-24 kV

Use:
Screened separable plug-in connector for XLPE-insulated 1- or 3-core cable with Al or Cu conductor for 12-24 kV. The connectors are supplied in kits of three.

The connector fits standard bushings in accordance with EN 50181, type outer cone.

Standards:
Meets the requirements of:
– SS 244 14 45 Edition 1

CENELEC
– HD 628.1 S1
– HD 629.1 S1

Design:
The connector is made of rubber in three layers: inner conductive layer, insulating layer and outer conductive layer.

A metallic part is moulded into the insulation which makes it possible to perform a voltage check. The metallic part is protected by a cover which is easily removed when checking the voltage.

The connector meets the requirements for being touch-proof. Can be installed indoors as well as outdoors.

Supplied complete with screw cable lug for the cable.

SOC 250 TP
Angled connector.

SOC 250 STP
Straight connector.

Note: For 3-core cables with common Cu-screen wires, a screen separation kit must be used. See page 67.

Designation	XLPE/EPR diameter mm	Conductor* cross section mm²	Bushing type	Weight kg/item
Angled connector with capacitive test point				
SOC 250 TP	12.5-25.8	25-95	Plug-in Ø 7.9	2.2
Straight connector with capacitive test point				
SOC 250 STP	12.9-25.8	25-95	Plug-in Ø 7.9	2.2

* For 10 and 16 mm² cables, to be used AK 250 as accessories, see page 45.

We reserve the right to alter the design and range of our products.

Dimensions and accessories SOC 250

All dimensions in mm

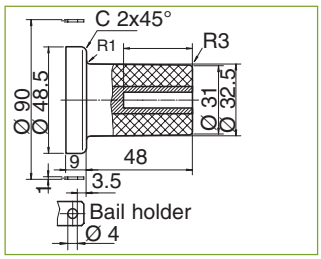

Standard bushing EN 50181
250 series 250 A
Contact type: Plug-in Ø 7.9 mm
Interface type: A

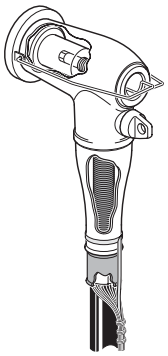

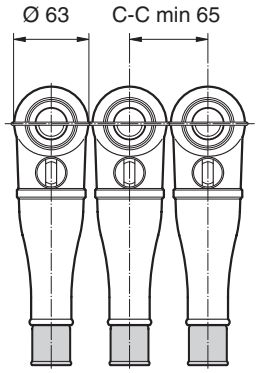

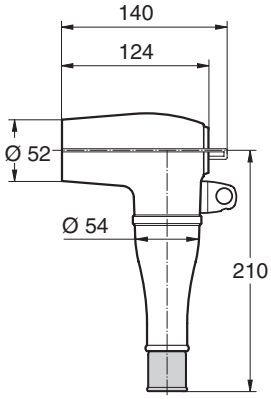

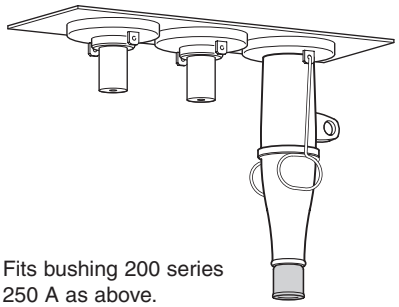

Fits bushing 200 series
250 A as above.

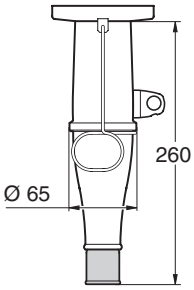

CU 250
Coupling piece to connect two connectors. The kit consists of a double epoxy bushing with fixing lugs bail restrain to SOC and a screw connector SH-SKR 35 to connect the screen of the cable.

IH SOC 250 TP
Inuslating hood of flexible rubber with outer conductive layer and a pre-installed insulating rod.

To be mounted on the bushing in a 250 A switchgear or transformer to insulate it when a cable is temporary disconnected but other cables are energized.

JP 250
Earth circuit connector for short-circuit protective earthing to be mounted on disconnected connector.

AK 250
Kit of accessories, allowing installation on smaller cables with conductor cross section 10-16 mm^2.

The kit consists of three adapters and three inserts. The insert is made of tinned copper and is clamped to the conductor with pliers before it is installed.

IP 250
Screened insulating plug for installation in the connector so that the cable can be energized even with the connection disconnected from the switchgear or transformer.

MA 250
Measurement adapter used for mega Ω measurements and to perform different measurements up to 5 kV DC, for example determination of phases.

LBR 250
Extended bail restrain for SOC 250 STP for installation in Schneider switchgear MGRM6.

Designation	Description	Qty.	Weight kg/item
CU 250	Coupling piece to connect two connectors	1	0.2
MA 250	Measurement adapter	1	0.3
JP 250	Earth kit	1	2.7
IP 250	Insulating plug	1	0.8
IH SOC 250 TP	Insulating hood	3	2.3
AK 250	Accessories kit	3	0.2
LBR 250	Extended bail restrain	3	0.01
PSSK, PSSK-E, PSST	Screen separation kit for 3-core cable	See page 67	1.0

We reserve the right to alter the design and range of our products.

Cable connectors, prefabricated screened separable 400 A SOC 400, 12-24 kV

- Cold-applied
- No special tools
- Prefabricated for simple and safe installation
- Minimal cable stripping
- Active pressure
- Complete kits
- Few sizes
- Long shelf life

Use:
Screened separable plug-in connector for XLPE-insulated 1- or 3-core cable with Al or Cu conductors for 12-24 kV.

The connectors are supplied in kits of three.

The prefabricated connector fits standard bushings type outer cone according to EN 50181 type plug-in.

Standards:
Meets the requirements of:
– SS 244 14 45 Edition 1
– HD 628.1 S1
– HD 629.1 S1

Design:
The connector is made of rubber in three layers: inner conductive layer, insulating layer and outer conductive layer.

The connector meets the requirements for being touch-proof. Can be installed indoors as well as outdoors.

Supplied complete with screw cable lug and plug-in connection.

SOC 400
Angled connector.

SOC 400 TP
Angled connector with capacitive test point.

Note: For 3-core cables with common Cu-screen wires, a screen separation kit must be used. See page 67.

Designation	XLPE/EPR diameter mm	Conductor cross section mm²	Bushing type	Weight kg/item
Angled connectors				
SOC 400-1	15.0-26.8	50-120*	Plug-in Ø 14	5.6
SOC 400-2	21.4-34.9	150-300	Plug-in Ø 14	6.0
Angled connector with capacitive test point				
SOC 400-1 TP	15.0-26.8	50-120*	Plug-in Ø 14	5.6
SOC 400-2 TP	21.4-34.9	150-300	Plug-in Ø 14	6.0

* For 35 mm² contact Aus.

We reserve the right to alter the design and range of our products.

Dimensions and accessories SOC 400

All dimensions in mm

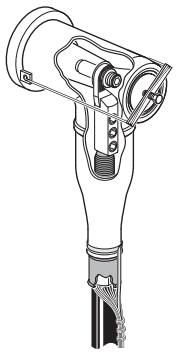

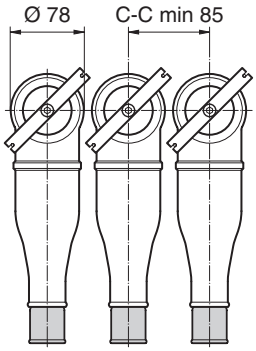

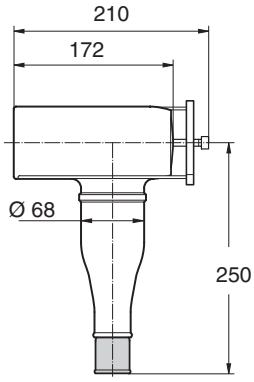

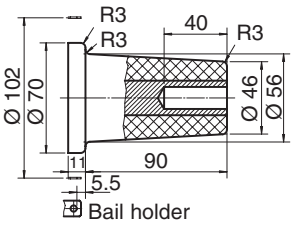

Standard bushing EN 50181
400 series 400 A
Contact type: Plug-in Ø14
Interface type: B

JP 400
Earth circuit connector for short-circuit protective earthing. To be mounted on the disconnected connector.

IP 400
Screened insulating plug for installation in the connector so that the cable can be energized even with the connection disconnected from the switchgear or transformer.

IH SOC 400
Inuslating hood of flexible rubber with outer conductive layer and a pre-installed insulating rod.
To be mounted on bushing in a 400 A switchgear or transformer to insulate it when a cable is temporary disconnected but other cables are energized.

Designation	Description	Qty.	Weight kg/item
JP 400	Earth circuit connector	1	2.2
IP 400	Insulating plug	1	2.2
IH SOC 400	Insulating hood	3	5.7
PSSK, PSSK-E, PSST	Screen separation kit for 3-core cable	See page 67	1.0

We reserve the right to alter the design and range of our products.

Cable connectors, prefabricated screened separable, 630 A SOC 630, 12-24 kV

- Cold-applied
- No special tools
- Prefabricated for simple and safe installation
- Minimal cable stripping
- Active pressure
- Complete kits
- Few sizes
- Long shelf life

Use:
Screened separable connector for XLPE-insulated 1- or 3-core cables with Al or Cu conductors for 12-24 kV. The connectors are supplied in kits of three.

The prefabricated connector fits standard bushings type outer cone in accordance with EN 50181 for 400 series M16 bolt.

Standards:
Meets the requirements of:
– SS 244 14 45 Edition 1
– HD 628.1 S1
– HD 629.1 S1

Design:
SOC is made of rubber in three layers: inner conductive layer, insulating layer and outer conductive layer.

The connector meets the requirements for being touch-proof.

Can be installed indoors as well as outdoors.

Supplied complete with screw cable lug and screw connection.

SOC 630
Angled connector.

SOC 630 TP
Angled connector with capacitive test point.

SOC 630
Angled connector for larger cables.

Note: For 3-core cables with common Cu-screen wires, a screen separation kit must be used. See page 67.

Designation	XLPE/EPR diameter mm	Conductor cross section mm²	Bushing type	Weight kg/item
Angled connectors				
SOC 630-1	15.0-26.8	50-120	Bolt M16	5.1
SOC 630-2	21.4-34.9	150-300	Bolt M16	5.5
SOC 630-3	31.5-42	400	Bolt M16	7.8
SOC 630-4	31.5-42	500	Bolt M16	7.7
SOC 630-5	40-46	630	Bolt M16	7.6
Angled connector with capacitive test point				
SOC 630-1 TP	15.0-26.8	50-120*	Bolt M16	5.1
SOC 630-2 TP	21.4-34.9	150-300	Bolt M16	5.5
SOC 630-3 TP	31.5-42	400	Bolt M16	7.8
SOC 630-4 TP	31.5-42	500	Bolt M16	7.7
SOC 630-5 TP	40-46	630	Bolt M16	7.6

* For 35 mm² contact us.

We reserve the right to alter the design and range of our products.

Dimensions and accessories SOC 630

All dimensions in mm

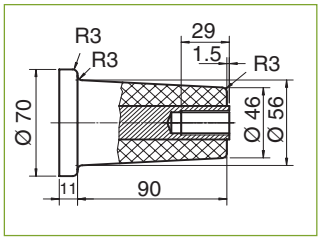

Standard bushing EN 50181
400 series 630 A
Contact type: Bolted M16
Interface type: C

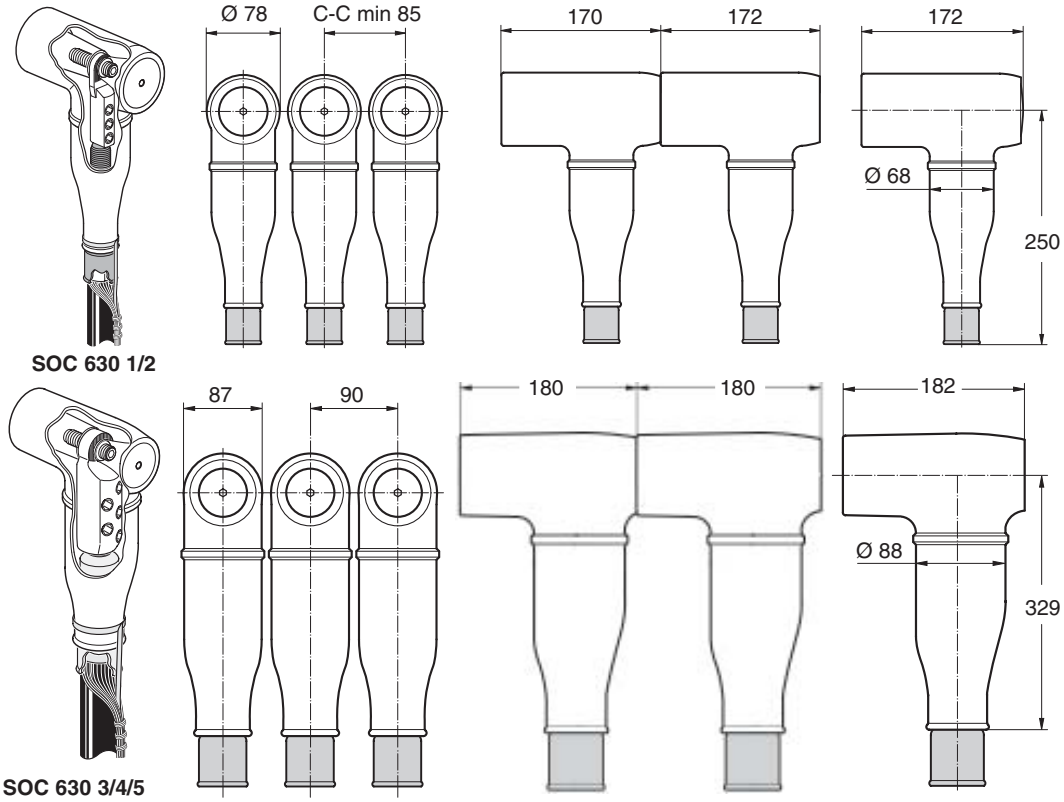

PC 630
Connector for connecting a SOC 630, parallel with another previous mounted SOC 630.

PG 630
Bushing for voltage testing of the cable.
SOC 630 does not need to be removed from its position.
The test bushing is installed on the connection instead of the insulati

IP 630
Screened insulating plug for installation in the connector so that the cable can be energized even with the connection disconnected from the switchgear or transformer.

PC 630/250
Parrallel connector for SOC 250, parallel with a previous mounted SOC 630.

JP 630
Earth circuit connector for short-circuit protective earthing to be mounted on the disconnected connector.

IH SOC 630
Inuslating hood of flexible rubber with outer conductive layer and a pre-installed insulating rod.
To be mounted on the bushing in a 630 A switchgear or transformer to insulate it when a cable is temporary disconnected but other cables are energized.

MA 630
Measurement adapter used for mega Ω measurements to perform different measurements up to 5 kV DC, for example determination of phases.

Designation	Description	Qty.	Weight kg/item
PC 630	Parallel connector	1	1.1
PC 630/250	Parallel connector between SOC 630 and SOC 250	3	3.0
PG 630	Test bushing	1	1.5
IP 630	Screened insulating plug	1	2.2
JP 630	Earthing kit	1	5.0
IH SOC 630	Sealing hood	3	5.2
MA 630	Measurement adapter	3	0.1
PSSK, PSST	Screen separation kit for 3-core cable	See page 67	1.0

We reserve the right to alter the design and range of our products.

- No special tools
- Prefabricated for easy and safe installation
- Complete kits
- Active pressure

Cable connector, indoor environment, Insulated 630 A KAP 630, 12-24 kV

Use:
For XLPE-insulated 1- or 3-core cable with Al or Cu conductors for 12-24 kV.

KAP can be used to connect a cable to gas-insulated SF_6 switchgear and in other compact installations, as well as for sub-station transformers.

The connectors are supplied in kits of three.

Standards:
Meets the requirements of:
– SEN 24 14 34
– SS 424 14 17 Edition 4

Design:
KAP is an insulated connector made of rubber. It is supplied complete with cable termination and screw cable lug. The covers are provided with a removable plastic plug to allow direct voltage testing on the conductor.

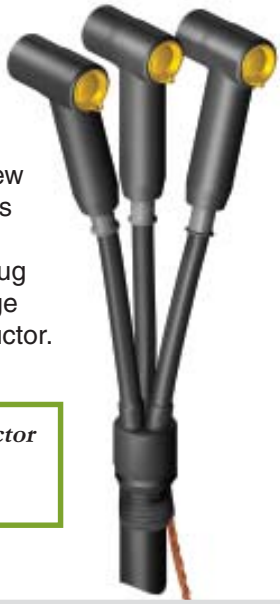

For plug-in connector 250 A or 400 A, see pages 44 and 46.

Designation	Conductor cross section 12 kV	Conductor cross section 24 kV	Specification	Weight
	mm²			kg/item
KAP 630-11	50-120	50-120*	Bolt M16	2.2
KAP 630-12	150-185	–	Bolt M16	2.5
KAP 630-22	240-300	150-300	Bolt M16	2.5
KAP 630-P11	50-120	50-120*	Connection in parallel	2.5
KAP 630-P12	150-185	–	Connection in parallel	2.5
KAP 630-P22	240-300	150-300	Connection in parallel	2.5
KAP 630-S12	–	–	Surge arrester	7.7
KAP 630-S24	–	–	Surge arrester	10.5

* For 35 mm² contact ABB Kabeldon.

Technical data of surge arresters for KAP

Designation	Maximum voltage U_m KV	Voltage-class U kV	Residual voltage at impulse current 8/20 µs kV				Temporary over voltage capability kV 1 seconds		3 seconds		10 seconds	
			1 kA	5 kA	10 kA	20 kA	A	B	A	B	A	B
KAP 630-S12	12	10	26.0	29.0	30.7	34.0	13.6	13.2	13.4	12.9	13.1	12.6
KAP 630-S24	24	20	52.0	58.0	61.4	68.0	27.2	26.3	26.7	25.7	26.2	25.1

A = Before impulse current
B = After 4/10 µs 100 kA impulse current.

Value A & B has been determined with a test sample pre-heated at 60°C according to IEC 60099-4 and refer to an ambient temperature of up to 45° C.

To be ordered separately for 3-core cable:

Designation	Description	See page
PSSK, PSSK-E, PSST	Screen separation kit	67

We reserve the right to alter the design and range of our products.

Dimensional drawings
KAP 630

All dimensions in mm

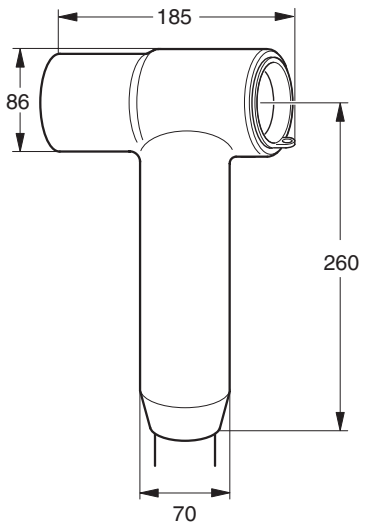

KAP 630

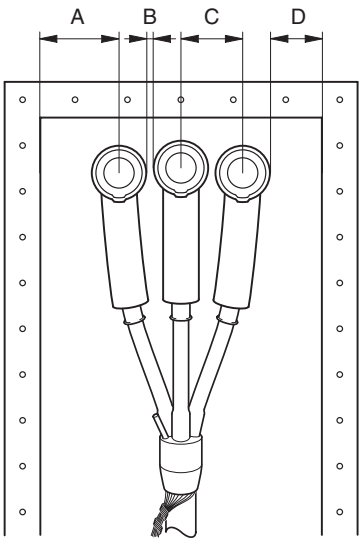

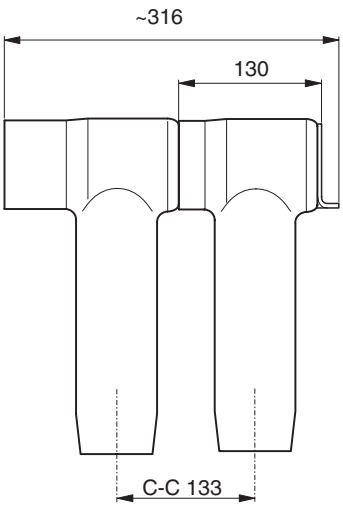

KAP 630 P

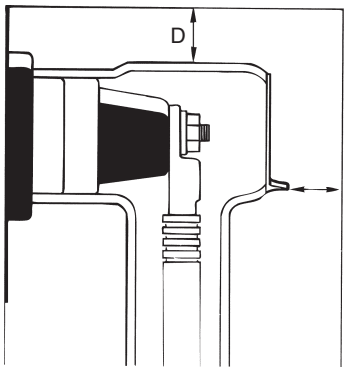

Recommended minimum distances
The indicated recommended minimum distances are generally applicable. For applications in which type testing has been performed, other minimum distances may be applied. This is the case, for example, for gas-insulated Ring Main Unit (RMU).

Recommended minimum air gap

Voltage kV	Insulation level kV	A	B	C	D
		mm			
12	75	50	10	90	10
24	125	90	30	110	50

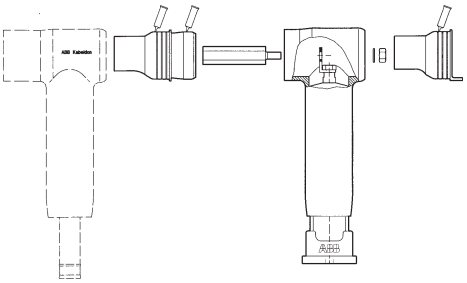

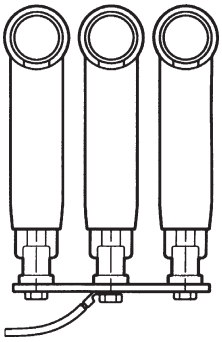

KAP 630-S
KAP 630 with surge arrester.

We reserve the right to alter the design and range of our products.

- No special tools
- Prefabricated for safe and fast installation
- Active pressure

Cable connector, for indoor environment, insulated 630 A KAP 300 U, 12-24 kV

Use:
For XLPE-insulated 1- or 3-core cable with Al or Cu conductors, for 12-24 kV.
KAP 300 U is especially well suited for the renovation of, for example, oil-filled transformer boxes, when replacing paper-insulated cable with XLPE cable. A type SOT indoor termination (must be ordered separately) is installed together with KAP 300 U on the XLPE cable, thus insulating the connection point when the oil is drained from the cable box.
KAP 300 U can also be mounted straight.

Standards:
Meets the requirements of:
– SEN 24 14 34
– SS 424 14 17 Edition 4

Design:
An insulated cable connection made of rubber. The covers are fitted with a removable plastic plug to allow direct voltage testing on the conductor.
Termination and cable lug are not included.

NB.
See dimensional drawings on the next page for minimum distance to earth.

Designation	Conductor cross section 12 -24 kV mm²	Specification	Weight kg/item
KAP 300 U	25-300	Bolt	2.0

To be ordered separately for 3-core cable:

Designation	Description	See page
PSSK, PSSK-E, PSST	Screen separation kit	67
SKSB	Screw cable lug	73
SOT	Cable termination	37

We reserve the right to alter the design and range of our products.

Dimensional drawings
KAP 300 U

All dimensions in mm

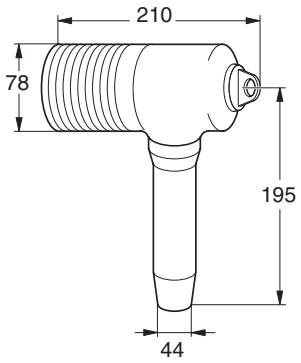

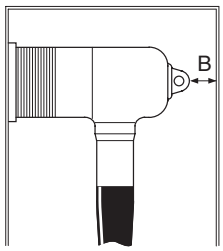

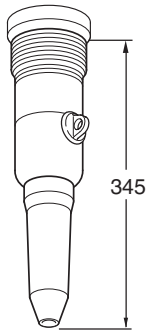

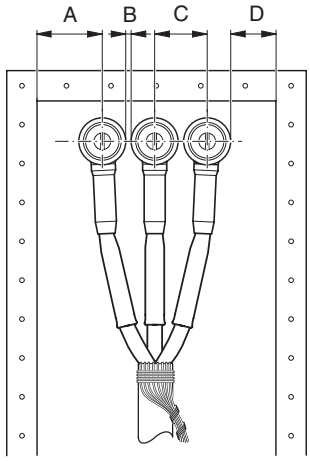

Straight KAP 300 U.

Recommended minimum distances
The indicated recommended minimum distances are generally applicable.

Recommended minimum air gap

Voltage kV	Insulation level kV	A	B	C	D
		mm			
12	75	50	10	90	10
24	125	110	50	130	50

We reserve the right to alter the design and range of our products.

Cable joint, prefabricated with cold shrink outer sheath SOJ 12-24 kV

- Cold-applied
- No special tools
- Prefabricated for easy and safe installation
- Active pressure
- Few components
- Long shelf life
- Reliable
- Joint bodies routine-tested

Use:
Prefabricated cable joint for XLPE-insulated 1- or 3-core cable with Al or Cu conductors, 12-24 kV.

Standards:
CENELEC
– HD 628.1 S1
– HD 629.1 S1

Other standards:
– SS 424 14 45 Edition 1
– VDE 0278
– KEMA S8
– IEEE 404 1993

Design:
The joint body is made of rubber in three layers: a conductive outer layer, an insulating and a conductive inner layer.
The kit contains all mounting material.

Outer sheath is to be selected as below:

SOJ CSS
contains a cold-shrink outer sheath and screw connectors for conductor and screen.

SOJ CS
contains a cold-shrink outer sheath. Connectors are not included.

For 16-35 mm² cables ADAPTER must be ordered separately, see page 57.

WIM 3 / WIM 4 – To be used as complement when jointing 3-core watertightened cable, see page 58.

SOJ CSS

Cable cross section 12 kV	24 kV	mm²	XLPE-diameter mm	Joint 1-core	CSS Weight kg/kit	CS Weight kg/kit	Joint 3-core	CSS Weight kg/kit	CS Weight kg/kit
50-70	–		15-19.5	**SOJ 121-1**	2.5	2.4	**SOJ 121-3**	5.0	4.7
95-150	–		18.5-24	**SOJ 122-1**	2.6	2.5	**SOJ 122-3**	5.5	5.2
185-240	–		23-28	**SOJ 123-1**	3.4	3.2	**SOJ 123-3**	7.0	6.2
300-400	–		27-34	**SOJ 124-1**	4.7	4.2	**SOJ 124-3**	–	7.3
500-630	–		33.5-46	**SOJ 125-1**	5.5	4.8	–	–	–
–	50-70		19-23.5	**SOJ 241-1**	3.3	3.2	**SOJ 241-3**	5.8	5.5
–	95-150		22.5-28	**SOJ 242-1**	3.6	3.5	**SOJ 242-3**	6.9	6.5
–	185-240		27-35	**SOJ 243-1**	4.3	4.0	**SOJ 243-3**	8.8	8.0
–	300		27-35		4.5	4.0	–	–	–
–	400		33.5-46	**SOJ 244-1**	5.3	4.8	–	–	–
–	500-630		33.5-46		5.5	4.8	–	–	–

To be ordered separately:

Accessories	Use	SOJ CSS	SOJ CS	See page
ADAPTER	Cables with different dimensions	–	X	57
JSA 10-13	Cables with copper tape screen	–	X	70
JSA 14-16	Cables with aluminium foil screen	–	X	70
TS	Sector shaped cables	X	X	57
SH-SKRM	Screw connector	–	X	73
STOP	Crutch-seal for three 1-core cables	X	X	57

We reserve the right to alter the design and range of our products.

- Cold-applied
- No special tools
- Prefabricated for easy and safe installation
- Active pressure
- Few components
- Long shelf life
- Reliable
- Joint bodies routine-tested

Cable joint, prefabricated for radially watertightened cable SOJ 12-24 kV

Use:
Prefabricated cable joint for XLPE-insulated 1- or 3-core cable with Al or Cu conductor and radially watertightened aluminium foil for 12-24 kV.

Standards:
CENELEC:
– HD 628.1 S1
– HD 629.1 S1

Other standards:
– SS 424 14 45 edition 1
– VDE 0278
– KEMA S8
– IEEE 404 1993

Design:
The joint body is made of rubber in three layers: a conductive outer layer, an insulating and a conductive inner layer.
The kit contains all mounting material.

SOJ CSWS

SOJ RWI

SOJ RWIT

There are different variations of the cable joints depending to the cable construction according to the following:

SOJ CSWS
Used for jointing watertightened 1-core cable with copper wire screen. Consists of a cold-shrink cable sheath, Al foil tube and also connectors for conductor and screen.

SOJ RWI
Used for jointing three 1-core cables, Prysmian type WISKI™ or similar. Contains copper braids to connect screens, Al foil tubes for radially watertightness and also outer sheath RULLE.
Connectors and items for jointing of separate earth wire are not included.

SOJ RWIT
Used for jointing three 1-core cables Prysmian type WISKI™ or similar, to a standard 3-core cable. Contains copper braids to connect screens, STOP longitudinal watertightness and outer sheath RULLE.
Connectors and articles for jointing a separate earth wire are not included.

For 16-35 mm² cables, ADAPTER must be ordered separately, see page 57!

Cable cross section 12 kV	24 kV	XLPE-diameter mm	Joint 1-core	CSWS Weight kg/kit	Joint 3 x 1-core	RWI Weight kg/kit	RWIT Weight kg/kit
mm²							
50-70	–	15-19.5	**SOJ 121-1 50**	3.0	**SOJ 121-31**	7.3	5.0
95-150	–	18.5-24	**SOJ 122-1 95150**	3.2	**SOJ 122-31**	7.9	5.5
185-240	–	23-28	**SOJ 123-1 240**	4.0	**SOJ 123-31**	10.3	7.0
300-400	–	27-34	**SOJ 124-1 400**	5.3	–		– –
500-630	–	33.5-46	**SOJ 125-1 630**	6.1	–		– –
–	50-70	19-23.5	**SOJ 241-1 50**	3.9	**SOJ 241-31**	10.0	5.5
–	95-150	22.5-28	**SOJ 242-1 95150**	4.2	**SOJ 242-31**	10.9	6.5
–	185-240	27-35	**SOJ 243-1 240**	4.9	**SOJ 243-31**	13.0	8.0
–	300-400	33.5-46	**SOJ 244-1 400**	5.9	–	–	–
–	500-630	33.5-46	**SOJ 244-1 630**	6.1	–	–	–

Accessories	Use	SOJ CSWS	SOJ RWI	SOJ RWIT	See page
Adapter	Adapter kit for cables with different dimensions	X	X	X	57
TS	Additional kit for sector shaped cables			X	57
SH-SKRM	Screw connector		X	X	73

We reserve the right to alter the design and range of our products.

Cable joint, prefabricated with or without outer sheath, RULLE SOJ 12-24 kV

- Cold-applied
- No special tools
- Prefabricated for easy and safe installation
- Active pressure
- Few components
- Long shelf life
- Reliable
- Joint bodies routine-tested

Use:
Prefabricated cable joint for XLPE-insulated 1- or 3-core cable with Al or Cu conductor for 12-24 kV.

Standards:
CENELEC
– HD 628.1 S1
– HD 629.1 S1

Other standards:
– SS 424 14 45 edition1
– VDE 0278
– KEMA S8
– IEEE 404 1993

Design:
The joint body is made of rubber in three layers: a conductive outer layer, an insulating and a conductive inner layer.
The kit contains all mounting material.

For 16-35 mm² cables ADAPTER must be ordered separately, see page 57!

Outer sheath is to be selected as below:

SOJ R
Contains RULLE outer sheath, a two-layer tape of EPDM-rubber and mastic, which is wrapped around the joint.
Connectors are not included.

SOJ SL
Supplied without outer sheath (slim line). An outer sheath approved by us must be added, for example type ARM.
Connectors are not included.

WIM 3 / WIM 4 – To be used as complement when jointing 3-core watertightened cable, see page 58.

SOJ R

Cable cross section 12 kV	24 kV	XLPE-diameter mm	Cable joint R 1-core	Weight kg/kit	Cable joint SL	Weight kg/kit	Cable joint R 3-core	Weight kg/kit	Cable joint SL	Weight kg/kit
mm²										
50-70	–	15-19.5	**SOJ 121-1**	2.6	**SOJ 121-1 SL**	1.0	**SOJ 121-3**	4.7	**SOJ 121-3 SL**	2.0
95-150	–	18.5-24	**SOJ 122-1**	3.0	**SOJ 122-1 SL**	1.1	**SOJ 122-3**	5.6	**SOJ 122-3 SL**	2.3
185-240	–	23-28	**SOJ 123-1**	3.1	**SOJ 123-1 SL**	1.2	**SOJ 123-3**	6.4	**SOJ 123-3 SL**	2.7
300-400	–	27-34	**SOJ 124-1**	4.3	**SOJ 124-1 SL**	1.6	**SOJ 124-3**	8.9	**SOJ 124-3 SL**	4.2
500-630	–	33.5-46	**SOJ 125-1**	5.9	**SOJ 125-1 SL**	2.2	**–**	–	**–**	–
–	50-70	19-23.5	**SOJ 241-1**	3.2	**SOJ 241-1 SL**	1.3	**SOJ 241-3**	6.2	**SOJ 241-3 SL**	2.8
–	95-150	22.5-28	**SOJ 242-1**	3.9	**SOJ 242-1 SL**	1.5	**SOJ 242-3**	7.0	**SOJ 242-3 SL**	3.4
–	185-300	27-35	**SOJ 243-1**	4.5	**SOJ 243-1 SL**	1.8	**SOJ 243-3**	9.1	**SOJ 243-3 SL**	4.5
–	400-630	33.5-46	**SOJ 244-1**	6.4	**SOJ 244-1 SL**	2.2	**–**	–	**–**	–

Accessories	Use	**SOJ R**	**SOJ SL**	See page
Adapter	Cables with different dimensions	**X**	**X**	57
JSA 10-13	Cables with copper tape screen	**X**	**X**	70
JSA 14-16	Cables with aluminium foil screen	**X**	**X**	70
TS	Sector shaped cables	**X**	**X**	57
WIM	Diffusion seal	**X**	**X**	58
ARM	Armouring kit	**–**	**X**	71
STOP	Branch seal for three 1-core cables	**X**	**–**	57
SH-SKRM	Screw connector	**X**	**X**	73

We reserve the right to alter the design and range of our products.

Accessories for SOJ

Additional kit TS

Additional kit for sector shaped 3-core cables, for use when the D-dimension over the insulation is above the value as below.

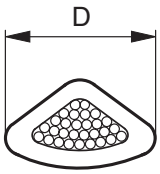

Designation	Fitting joint	D mm	Weight kg/item
TS 121	SOJ 121-3	20	0.1
TS 242	SOJ 242-3	29	0.1
TS 243	SOJ 243-3	39	0.1

Adapter kit, ADAPTER

Adapter for cables from 10 mm² and for jointing cables with a smaller cross section. Manufactured and tested to cope with one step down to the nearest joint size (each kit contains one adapter).

Designation	Fitting joint	Minimum conductor cross section mm²	XLPE diameter mm	Weight kg/item
ADAPTER 1*	SOJ 121, 241	10	Minimum 10	0.1
ADAPTER 2	SOJ 122	50	15.0-19.5	0.1
ADAPTER 3	SOJ 123	95	18.5-24.0	0.1
	SOJ 242	50	19.0-23.5	0.1
ADAPTER 4	SOJ 124	185	23.0-28.0	0.1
	SOJ 243	95	22.5-28.0	0.1
ADAPTER 5	SOJ 125	300	27.0-34.0	0.1
	SOJ 244	185	27.0-35.0	0.1
ADAPTER 6	SOJ 125	185	23.0-28.0	0.1
	SOJ 244	95	22.5-28.0	0.1

* Minimum diameter over connector is 12 mm.

Crutch seal, STOP

For sealing when three 1-core cables are jointed to a 3-core cable.

Designation	Voltage kV	Suitable for 1-core cables with conductor cross section in mm²	Weight kg/item
STOP 1	12	50-185	0.2
	24	50-95	0.2
STOP 2	12	> 240	0.2
	24	> 120	0.2

We reserve the right to alter the design and range of our products.

Accessories for SOJ

WIM 3

WIM 4

Diffusion seal, WIM
Used as complement to SOJ CS, SOJ CSS or SOJ R when jointing 3-core watertightened cables with diffussion barrier of aluminium.

Designation	Fitting joint	Type of cable	Weight kg/kit
WIM 3	SOJ 121-3, 122-3, 123-3, SOJ 241-3, 242-3, 243-3	3-core with Al foil in direct contact with screen	0.5
WIM 4	SOJ 121-3, SOJ 122-3	3-core with inner cable sheath between Al foil and screen	4.0

To be ordered separately:

Accessories	Type of jointing / cable type	**CSS**	**CS**	**R**	**SL**	**RWI**	**RWIT**	See page
TS	Sector shaped cable	**X**	**X**	**X**	**X**		**X**	57
Adapter	Cables with different dimensions	**X**	**X**	**X**	**X**	**X**	**X**	57
STOP	3 x 1-core to a 3-core			**X**				57
WIM	Radial watertightness cable	**X**	**X**	**X**				58
JSA 10-13	Cable with copper tape screen	**X**	**X**	**X**				70
JSA 14-16	Cable with aluminium foil screen only	**X**	**X**	**X**				70
ARM	Armoured cable or when extra mechanical protection is required .				**X**			71
SH-SKRM	Screw connector	**X**	**X**	**X**	**X**	**X**		73

We reserve the right to alter the design and range of our products.

Dimensional drawings, SOJ

All dimensions in mm

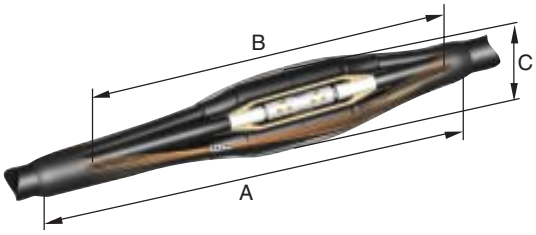

SOJ with outer sheath cold shrink.

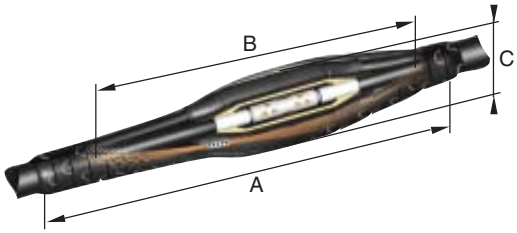

SOJ with outer sheath RULLE.

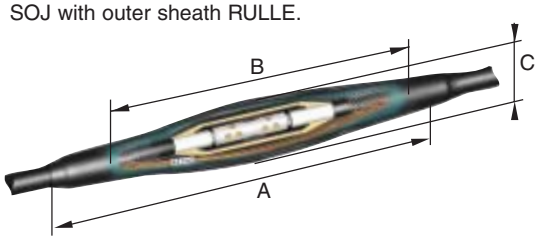

SOJ with outer sheath cold shrink for watertightened 1-core cables.

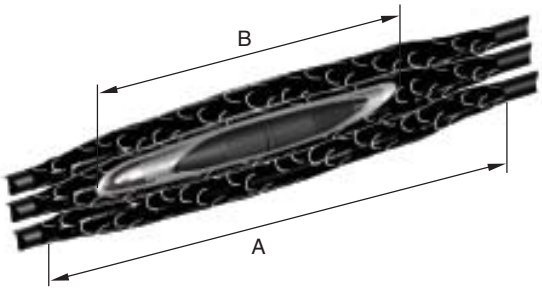

SOJ with outer sheath RULLE on 3 x 1-core WISKI™ cables.

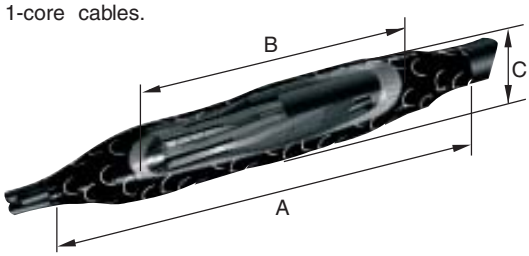

SOJ with outer sheath RULLE on 3 x 1-core WISKI™ cables to a 3-core XLPE-cable.

Designation	Dimensions A*	B*	C*
		mm	
1-core			
SOJ 121-1	980-1060	770-860	60
SOJ 122-1	980-1100	770-900	65
SOJ 123-1	1050-1220	940-960	75
SOJ 124-1	1050-1370	940-1080	75
SOJ 125-1	1050-1400	940-1200	90
SOJ 241-1	1050-1220	900-940	75
SOJ 242-1	1050-1220	900-940	80
SOJ 243-1	1050-1370	940-1080	85
SOJ 244-1	1050-1400	940-1200	90
3-core			
SOJ 121-3	1200-1350	1000	120
SOJ 122-3	1350	1150	125
SOJ 123-3	1390-1500	1190	140
SOJ 124-3	1500	1310	165
SOJ 241-3	1350	1140	145
SOJ 242-3	1320-1390	1190	160
SOJ 243-3	1500	1310	180

* Estimated dimensions depending on installation and type of outer sheath.

We reserve the right to alter the design and range of our products.

- Fits all cable dimensions
- Easy jointing of cables with different sizes
- Active pressure

Cable joint, tape SMXB 12-36 kV

Use:
For jointing XLPE-insulated 1- and 3-core cables with Al or Cu conductors 12-36 kV.

Standards:
Meets the requirements of:
– SEN 24 14 34
– SS 424 14 17 Edition 4
– VDE 0278

Design:
The joint kit consists of tapes, stress grading pads FSD and a copper net.
The connectors for the conductor and screen must be ordered separately.
Welding of conductors will require welding equipment, which must be ordered separately.

Designation	Weight kg/item
1 x 3-core or 3 x 1-core cables	
SMXB 1-3	2.6
SMXB 2-3	3.7
SMXB 3-3	4.0
SMXB 4-3	4.3
SMXB 5-3	4.5
SMXB 6-3	5.9
SMXB 7-3	6.7
SMXB 8-3	9.7
SMXB 9-3	12.9

For selecting size see next page.

Designation	Weight kg/item
1 x 1-core cable	
SMXB 1-1	0.9
SMXB 2-1	1.1
SMXB 3-1	1.4
SMXB 4-1	1.6
SMXB 5-1	2.0
SMXB 6-1	2.2
SMXB 7-1	2.5
SMXB 8-1	3.6
SMXB 9-1	5.1
SMXB 10-1	3.8
SMXB 11-1	5.1
SMXB 12-1	6.7
SMXB 13-1	7.8

We reserve the right to alter the design and range of our products.

Recommendation tables for SMXB

For compression of aluminium conductors

Voltage kV	Insulation thickness mm	Cross section mm² 10	25	35	50	70	95	120	150	185	240	300	400	500	630
One 3-core or three 1-core cables		Cable joint SMXB No.													
12	3.4	1	1	1	1	1	2	2	2	3	3	6	7	7	8
24	5.5	2	3	4	4	4	5	5	6	6	6	8	8	8	9
One 1-core cable															
36	8.0	–	10	10	10	10	10	10	10	11	11	11	11	11	12

For compression of copper conductors

Voltage kV	Insulation thickness mm	Cross section mm² 25	35	50	70	95	120	150	185	240	300	400	500	630	800	1200
One 3-core or three 1-core cables		Cable joint SMXB No.														
12	3.4	1	1	1	1	1	1	2	2	3	3	7	7	7	–	–
24	5.5	3	3	3	3	3	5	5	5	6	6	7	8	8	–	–
One 1-core cable																
36	8.0	10	10	10	10	10	10	10	11	11	11	11	11	11	13	13

For thermite welding of aluminium or copper conductors

Voltage kV	Insulation thickness mm	Cross section mm² 400	500	630	800	1000	1200
One 3-core or three 1-core cables		Cable joint SMXB No.					
12	3.4	7	7	7	–	–	–
24	5.5	8	8	8	–	–	–
One 1-core cable							
36	8.0	11	11	11	11	12	12

We reserve the right to alter the design and range of our products.

Accessories for SMXB

STOP
Crutch seal for sealing when 3 x 1-core cables are jointed to a 3-core cable.

Designation	Voltage kV	Suitable for 1-core cables with conductor cross section in mm²	Weight kg/item
STOP 1	12	50-185	0.2
	24	50-95	0.2
STOP 2	12	> 240	0.2
	24	>120	0.2

WIM 3

WIM 4

WIM
Diffusion seal kits for restoring radial watertightness on cables with diffusion barrier of aluminium.

Designation	Fitting joint	Type of cable	Weight kg/kit
WIM 1	SMXB 1-1, 2-1, 3-1, 4-1	1-core with Al foil	0.5
WIM 2	SMXB 5-1, 6-1, 7-1, 8-1, 9-1, 10-1, 11-1, 12-1	1-core with Al foil	0.5
WIM 3	SMXB 1-3, 2-3, 3-3, 4-3 SMXB 5-3, 6-3	3-core with Al foil in direct contact with screen	0.5
WIM 4	SMXB 1-3, 2-3, 4-3, 5-3	3-core with inner sheath between Al foil and screen	4.0

To be ordered separately:

Designation	Description
Screw connector	For conductor and screen
Welding equipment	Welding of conductors

We reserve the right to alter the design and range of our products.

Kabeldon cable cabinet 250 A HDC 250

- Touch-proof
- Possibility of capacitive test point
- Possibility of earthing
- Possibility of branching cables with different sizes
- Simple, safe and compact

Use:
For jointing or branching XLPE-insulated 1-core or 3-core, 12-24 kV cables with conductor cross-section 10-95 mm², 250 A. Up to 3 cables can be connected in parallel.

Standards:
Enclosure meets the requirements of mechanical impact tests according to:
IEC 60439-5

Cable accessories meets the requirements of electrical tests according to:
– SS 424 14 45

CENELEC:
– HD 628.1 S1
– HD 629.1 S1

Design:
The cabinet is made of hot-dip-galvanized sheet steel with foundation base plate and additional corrosion protection on parts which will be buried under ground.

The screened separable cable connections are connected by coupling pieces which are mounted in the cabinet.

Connectors with capacitive test point for connecting **three** 3-phase cables are included.

Any chosen cable can then be disconnected for live sectioning or to be earthed.

The cabinet is supplied with locks and padlock shackles.

Mounting two 3-core cables with screen connection kits and three 1-core cables

Note: For 3-core cables, screen separation kit must be used!
It must be ordered separately according to page 67.

Designation	XLPE-diameter mm	Conductor cross section mm²	Dimensions Height mm	Width mm	Depth mm	Weight kg /unit
HDC 250	12.9-25.8	25-95*	895	996	312	117

* For 10 and 16 mm², to be used AK 250 as accessories, see page 64!

We reserve the right to alter the design and range of our products.

Accessories for cable cabinet HDC 250

IP 250
Screened insulating plug for installation in the connector so that the cable can be energized even when the connection is disconnected.

JP 250-HDC
Earth circuit connector for short-circuit protective earthing. To be mounted on a disconnected connector. 3 pieces in a case.

AK 250
Kit of accessories for SOC 250, allowing installation on smaller cables with conductor cross section 10-16 mm^2.
The kit consists of three adapters and three inserts. The insert is made of tinned copper and is clamped to the conductor with pliers before it is installed in the connector.

IH SOC 250 TP
Inuslating hood made of flexible rubber with outer conductive layer and an already installed insulating hood. To be mounted at the bushing in HDC 250 for insulation when a cable is temporary disconnected and remaining cables are under voltage.

PSSK: for cables with Cu-wire screen, heat-shrink.
PSSK E: for Ericsson's cables with Al-wire screen, heat-shrink.
PSST: screen separation for 3-core cable, tape.

MA 250
Measurement adapter used for mega Ω measurements and to perform different measurements up to 5 kV DC, for example determination of phases.

KA 250
Transversal anchor bar.

UKRA 90
Universal clamp.

Designation	Description	Qty kit	Weight kg/unit
IP 250	Screened insulating plug	1	0.8
JP 250-HDC	Earthing circuit connector	3	3.0
AK 250	Accessories kit for cables 10-16 mm^2	3	2.2
IH SOC 250 TP	Insulating hood	3	2.3
MA 250	Measurement adapter	1	0.3
KA 250	Busbar	1	0.5
PSST 150 tape	Screen separation kit for 3-core cable <150 mm^2, 12-24 kV	1	1.0
PSSK 1 heat shrink	Screen separation kit for 3-core cable 10-70/12 kV, 10-35/24 kV	1	1.0
PSSK 1 E heat shrink	Screen separation kit for 3-core cable 10-70/12 kV, 10-35/24 kV	1	1.0
UKRA 90	Clamp for fixing cables	1	0.23

* Special screen separation for Ericsson's 3-core cable with Al-wire screen.

We reserve the right to alter the design and range of our products.

- Touch-proof
- Possibility of capacitive test point
- Possibility of earthing
- Possibility of branching cables with different sizes
- Simple, safe and compact

Kabeldon cable cabinet 630 A HDC 630, 12-24 kV

Use:
For jointing or branching XLPE-insulated 1-core or 3-core 12-24 kV cables with conductor cross section 50-300 mm², 630 A. Up to 4 cables can be connected in parallel.

Standards:

Enclosure meets the requirements of mechanical impact tests according to:
IEC 60439-5

Cable accessories meets the requirements of electrical tests according to:
CENELEC:
– HD 628.1 S1
– HD 629.1 S1

Design:
The cabinet is made of hot-dip-galvanised sheet steel with foundation base plate and additional corrosion protection on parts which will be buried under ground.

The screened separable cable connections are connected by coupling pieces which are mounted in the cabinet.

Connectors with capacitive test point for connecting **two** three-phase cables are included.

For branching, three parallel connector PC 630 and one kit of screened separable connector SOC 630 of the appropriate size are to be added to the cabinet.

Any chosen cable can then be disconnected for live sectioning or to be earthed.

The cabinet is supplied with standard locks and padlock shackles.

Mounting two 3-core cables with screen connection kits and three 1-core cables

Note: For 3-core cables, screen separation kit must be used!
It must be ordered separately according to page 67.

Designation	XLPE-diameter mm	Conductor cross section mm²	Dimensions Height	Width	Depth	Weight kg /unit
			mm			
HDC 630-1	15.0-26.8	50-120	895	996	450	140
HDC 630-2	21.4-34.9	150-300	895	996	450	140

We reserve the right to alter the design and range of our products.

Accessories for cable cabinet HDC 630

SOC 630
Screened separable connector.

JP 630-HDC
Earthing device for short-circuit protective earthing. To be mounted to disconnected connector. 3 pieces in a case.

JPA V
Tool for earthing-for-work device.

PC 630/250
Connector for SOC 250, parallel with a previously mounted SOC 630.

SOC 250-TP
Screened separable connector with possibility of capacitive test point. For connecting an additional cable for 250 kV.

MA 630
Measurement adapter used for mega Ω measurements and to perform different measurements up to 5 kV DC, for determination of phases.

IH SOC 630
Sealing hood of HD-polyethylene, to be installed in SOC instead of cable in order to temporarily insulate 630 A switchgear or transformer bushings.

PC 630
Connector for connecting a SOC 630, parallel with a previously mounted SOC 630.

JPA 630-HDC
Earthing-for-work device. 3 pieces in a case.

KA 630
Transversal anchor bar.

IP 630
Screened insulating plug for installation in the screened separable connector so that the cable can be energized even when the connector is disconnected from the switchgear or transformer.

PSSK: for cables with Cu-wire screen, heat shrink.
PSSK E: for Ericsson's cables with Al-wire screen, heat shrink.
PSST: screen separation for 3-core cable, tape.

UKRA 90
Universal clamp.

Designation	Description	Qty a kit	Weight kg/unit
SOC 630-1	Screened separable connector for branching	3	2.2
SOC 630-2	Screened separable connector for branching	3	2.2
SOC 250 TP	Connector with capacitive test point	3	2,2
PC 630	For connecting of cable for branch seal	1	1.1
IP 630	Insulatated plug	1	0.8
JP 630-HDC	Earthing circuit connector	3	1.3
MA 630	Measurement adapter	1	0.1
JPA 630-HDC	Earthing-for-work device	3	1.9
PSSK 1 heat shrink	Screen separation 3-core cable 10-70/12 kV, 10-35/24 kV	1	1.0
PSSK 2 heat shrink	Screen separation 3-core cable 95-300/12 kV, 50-300/24 kV	1	1.0
PSSK 1 E heat shrink	Screen separation 3-core cable 10-70/12 kV, 10-35/24 kV	1	1.0
PSSK 2 E heat shrink	Screen separation 3-core cable 95-300/12 kV, 50-300/24 kV	1	1.0
PSST 150 tape	Screen separation 3-core cable <150 mm^2	1	1.0
PSST 300 tape	Screen separation 3-core cable 185-300 mm^2	1	1.0
PC 630/250	Parallel connector between SOC 630 and SOC 250	3	3.0
IH SOC 630	Insulating hood	3	5.2
JPA V	Tool for earthing-for-work device	1	1.8
KA 630	Busbar, add two when using 1-core cables	1	0.8
UKRA 90	Clamp for fixing cables	1	0.23

* Special screen separation for Ericsson's 3-core cable with Al-wire screen.

We reserve the right to alter the design and range of our products.

- Prevent flash-over between phases

Screen separation kit for SOC and KAP, PSST, PSSK

Use:
For cables with common copper wire screen or Ericsson cables with aluminium wire screen.
The screen of the 3-core cable is split out to each phase.
Used to prevent flashover between the phases, for example in a switchgear bay.
Used together with screened separable connector SOC or insulated connector KAP.
When a type SOC screened connection is installed, each core screen is connected to the outer conductive layer.

Standard:
Meets the requirements of EBR KJ 25:99

Design:
PSSK: A copper stocking with a screen cross section of 25 mm² is fitted on each phase and connected to the screen wires of the cable.
A heat shrink crutch seal and hoses are used as an outer sheath.
Standard length is about 1200 mm and topical accessories. It can also be adapted to suit the requirements of a particular installation.

PSST: A copper stocking with a screen cross section of 25 mm² is fitted on each phase and connected to the screen wires of the cable.
A crutch seal and transparent tape are used as an outer sheath over each core as a protection cover.
Standard length is about 800 mm but it can also be adapted to suit the requirements of a particular installation.

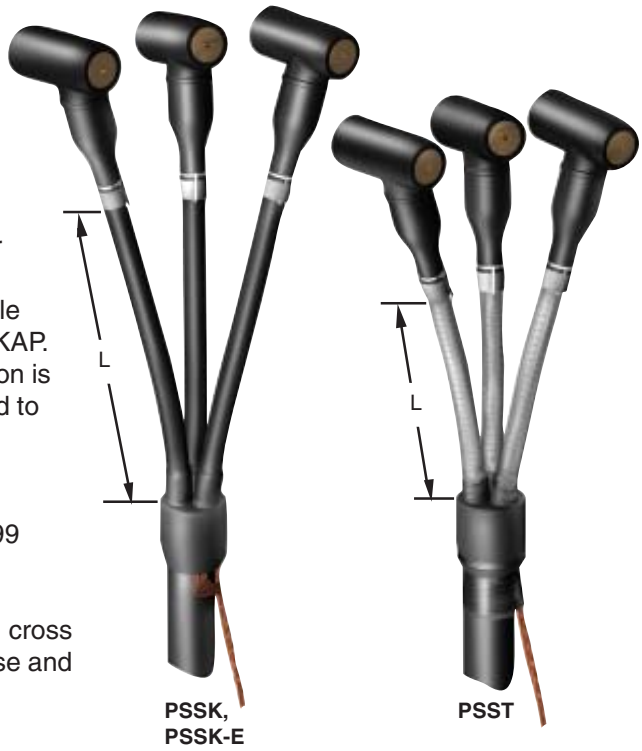

Designation	Conductor cross section 12 kV	Conductor cross section 24 kV	Length L	Weight
	mm²		mm	kg/item
PSSK 1	10 -70	10 -35	1200	1.0
PSSK 2	95 -300	50 -300	1200	1.0
PSSK 1 E*	10 -70	10 -35	1200	1.0
PSSK 2 E*	95 -300	50 -300	1200	1.0
PSST 150	95 -150	95 -150	800	1.0
PSST 300	185 -300	185 -300	800	1.0

* Special kits to be used with Ericsson's cables with Al-screen wires.

We reserve the right to alter the design and range of our products.

Branch seal kit for XLPE-insulated 3-core cables with copper wire, TSH Screen prolongation hose, SSH

Use:
TSH, branch seal for sealing the branch when installing cable terminations SOT, APIT, APSTA on XLPE-insulated 3-core cables, indoor or outdoor.

SSH are kits with protective hoses to be used as additional prolongation of the branch seal when necessary.

Design:
TSH includes branch seal and protective hoses of heat-shrink material, lashing wire for mechanical reinforcement of the branch, earth wire and non-corrosive band strip for connection of earth potential to termination.

- **TSH 1 L** and **TSH 2 L** include 3 heat-shrink hoses, length 1.2 m.
- **TSH 1 S** and **TSH 2 S** include 1 heat-shrink hose, length of 1.2 m to be cut in suitable lengths for current installation.
- **SSH 1 L** and **SSH 2 L** include 3 heat-shrink hoses, length 1.2 m.
- **SSH 1 S** and **SSH 2 S** include 3 heat-shrink hoses, length 0.4 m.

Designation	Outer diameter cable		Core diameter		Cable cross section		Length	Weight
	Min	Max	Min	Max	12 kV	24 kV		
	mm		mm		mm²		m	kg/kit
TSH 1 L	22	60	9	27	10-95	10-50	Approx. 1.25	0.5
TSH 1 S	22	60	9	27	10-95	10-50	Approx. 0.45	0.3
TSH 2 L	47	110	16	50	120-300	70-300	Approx. 1.25	1.0
TSH 2 S	47	110	16	50	120-300	70-300	Approx. 0.45	0.7
SSH 1 L	–	–	9	27	10-95	10-50	1.2	0.4
SSH 1 S	–	–	9	27	10-95	10-50	0.4	0.1
SSH 2 L	–	–	16	50	120-300	70-300	1.2	0.6
SSH 2 S	–	–	16	50	120-300	70-300	0.4	0.2

We reserve the right to alter the design and range of our products.

- The range can be used for different screen types

Earthing kit for cable terminations, JXT 1-3 and JSA 4-6

Earthing kits to connect the earth screen of the cable at a cable termination. For XLPE-insulated cables with earth screen of copper tape or aluminium foil. The kits are designed for ABB Kabeldon terminations and connections. There is enough material in the kits for three 1-core cable terminations.

There are also complete kits for 1-core cables.

If the cable has only copper wire screen, no earthing kit is needed.

For cables with other types of screen, or 3-core cables with Cu-tape screen, contact us for information.

Cables with copper tape screen
JXT 1-3 contains copper stockings which are connected to the screen with constant force springs.

Cables with aluminium foil screen
JSA 4 -6 contains copper braids which are connected to the screen with a plate and constant force springs.

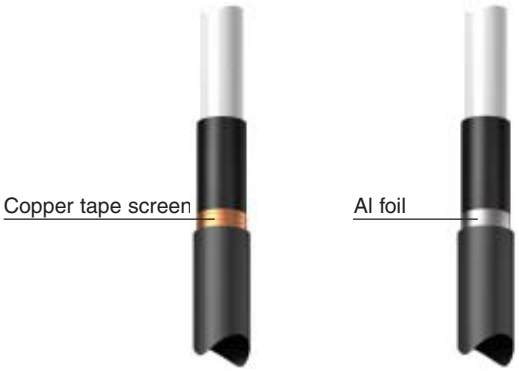

Cable	For cables with copper tape screen			For cables with aluminium foil screen		
Ø Screen mm	15 – 25	20 – 30	31 – 50	20 – 30	25 – 40	20 – 30
Earthing kit	**JXT 1**	**JXT 2**	**JXT 3**	**JSA 4**	**JSA 5**	**JSA 6**
Cable termination				IV-tape	IV-tape	Shrink sleeve
SOT 241	X			X		X
SOT 242		X			X	
SOT 242 B			X			
SOT 243	X			X		
SOT 244		X		X		X
SOT 245			X		X	
SOT 246			X			
SOT 361			X		X	
SOT 362			X			
SOC 250	X			X		X
SOC 400-1		X		X		X
SOC 400-2		X		X		X
SOC 630-1		X		X		X
SOC 630-2		X		X		X
KAP 630-11	X			X		X
KAP 630-12	X			X		X
KAP 630-22		X			X	

We reserve the right to alter the design and range of our products.

- The range can be used for different screen types

Screen connection for cable joints, JSA 10-16

Screen connection to connect the earth screen of the cable in a joint. For XLPE-insulated cables with earth screen of copper tape or aluminium foil. The kits are designed for Kabeldon cable joints type SOJ and SMXB. There is enough material in the kits for one 3-core joint or three 1-core joints.

There are also complete kits for 3-core cables with Cu-tape screen.

If the cable has only copper wire screen, no earthing kit is needed.

For cables with other types of screen, or 3-core cables with Cu-tape screen, contact us for information.

Cables with copper tape screen
JSA 10-13 contains copper stockings which are connected to the screen with constant force springs. Connections to armouring (if any) are made with lashing wire.

Cables with aluminium foil screen
JSA 14-16 contains copper braids which are connected to the screen with a plate and constant force springs.

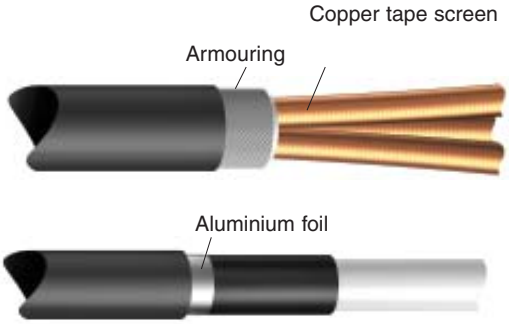

Cable	For cables with copper tape screen				For cables with aluminium foil screen		
Ø XLPE mm	17 – 20	19 – 27	25 – 35	31 – 48	19 – 27	25 – 35	31 – 48
Earthing kit for 1-core	**JSA 10-1**	**JSA 11-1**	**JSA 12-1**	**JSA 13-1**	**JSA 14-1**	**JSA 15-1**	**JSA 16-1**
Earthing kit for 3-core	**JSA 10-3**	**JSA 11-3**	**JSA 12-3**	**JSA 13-3**	**JSA 14-3**	**JSA 15-3**	**JSA 16-3**
Cable joint							
SOJ 121	X						
SOJ 122		X			X		
SOJ 123			X			X	
SOJ 124			X			X	
SOJ 125				X			X
SOJ 241		X			X		
SOJ 242		X			X		
SOJ 243			X			X	
SOJ 244				X			X
SMXB 1	X						
SMXB 2		X			X		
SMXB 3			X			X	
SMXB 4		X			X		
SMXB 5		X			X		
SMXB 6			X			X	
SMXB 7				X			X
SMXB 8				X			X
SMXB 9				X			X
SMXB 10			X			X	
SMXB 11				X			X

We reserve the right to alter the design and range of our products.

Armouring kit ARM

Use:
For restoring a steel wire or steel tape armoured cable.
ARM can be used with SOJ and SMXB joints, as well as other joints.

Design:
The kit consists of plastic mesh, spiral, funnel with holder, transparent tape and cast resin. The mesh and spiral are placed over the joint and sealed with the tape. The cast resin, which contains a base and hardener in a partitioned bag, is mixed and poured into the funnel until the mesh is full.
The maximum storage temperature for the casting resin is 30 °C.

Kabeldon cable joints type SOJ and SMXB are to be completed with ARM as following:

Joint type	ARM 1	ARM 2	ARM 3
SOJ 121-3	X		
SOJ 122-3		X	
SOJ 123-3		X	
SOJ 124-3			X
SOJ 241-3	X		
SOJ 242-3		X	
SOJ 243-3		X	
SMXB 1-3	X		
SMXB 2-3		X	
SMXB 3-3		X	
SMXB 4-3	X		
SMXB 5-3		X	
SMXB 6-3			X
SMXB 7-3			X
SMXB 8-3			X

For selecting ARM for unknown applications. Requires the length of joint "L" and diameter over joint "Ø" as below.

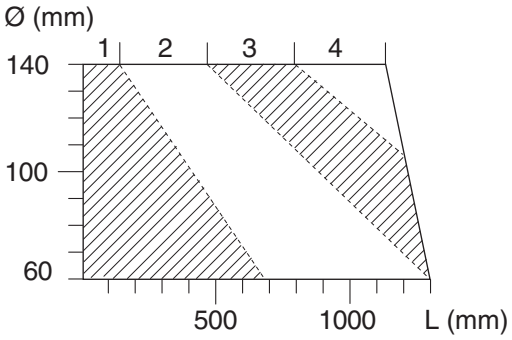

ARM kit size

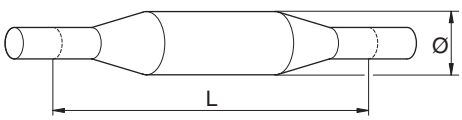

E.g. Ø 115 and L 850 mm give ARM 3.

Designation	Weight kg/item
ARM 1	3.5
ARM 2	6.5
ARM 3	8.0
ARM 4	10.0

We reserve the right to alter the design and range of our products.

- No special tools

Connectors

All dimensions in mm

FK 120
Overhead line clamp.
A greased tin-plate must be used when connecting to a Cu conductor outdoors.

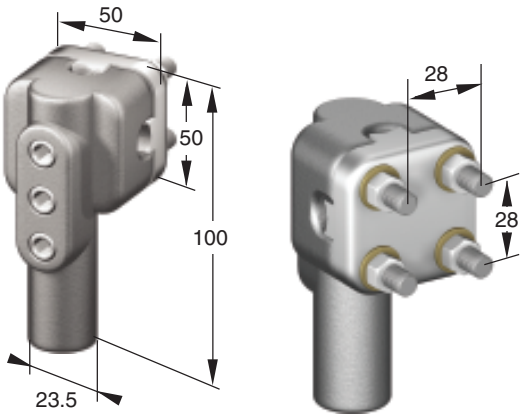

FK 300
Overhead line clamp.
A greased tin-plate must be used when connecting to a Cu conductor outdoors.

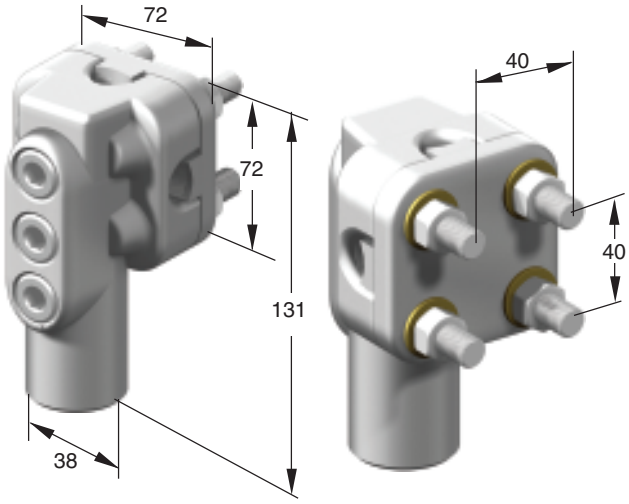

FKFB
Bracket to connect overhead line clamp FK to surge arrester.

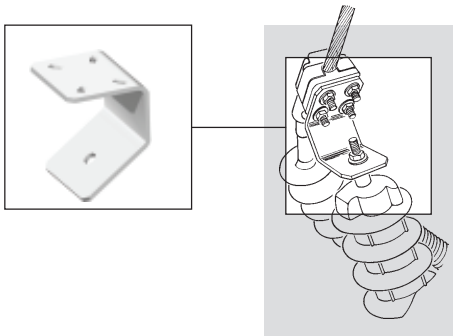

Designation	Conductor Al or Cu		Aerial line Al		Weight
	size	max Ø	size	Ø	
	mm²	mm	mm²	mm	kg/item
FK 120	50-120	13	31-99	5-12	0.5
FK 300	50-300	21	62-234	10-20.5	0.9
FKFB	–	–	–	–	0.1

We reserve the right to alter the design and range of our products.

- No special tools

Connectors

All dimensions in mm

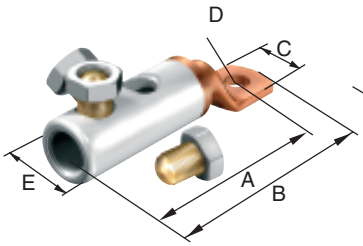

SKSB
Bi-metallic screw cable lug for Al and Cu conductors up to 36 kV.
- Meets the requirements of: IEC 61238-1
- The cable lug is equipped with a turnable two-sided shear-off bolt and a specially designed nut.
  The bolt is rotated in the appropriate direction, and the nut is then assembled.
  When the specified torque is reached, the bolt will shear-off and the installation is completed.
- Single core kits.

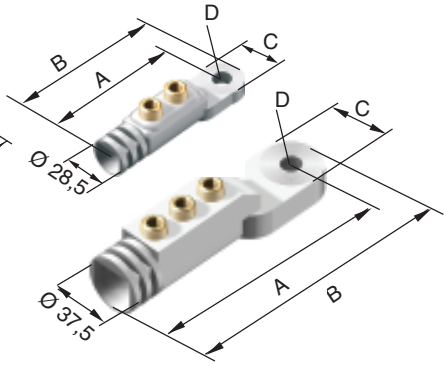

SKSA 95-13, 300-13
Screw cable lug for indoor and outdoor connection of Al or Cu conductors. Can be connected to an Al or Cu busbar.
A greased cupal washer must be used when connecting to a Cu conductor outdoors.
- Meets the requirements of: IEC 61238-1
- Single core kits.

CW 3013, CW 3817
Cupal washer, to be used when connecting an aluminium cable lug to a copper busbar outdoors. The washers are coated with contact grease.
- Supplied in bags of three.

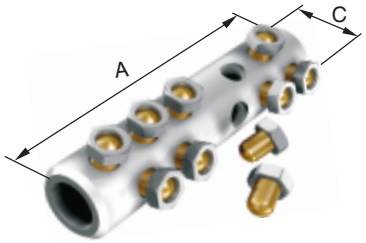

SH-SKRM
Screw connector with partition and shear-off bolt for Al and Cu conductors up to 36 kV.
- Meets the requirements of: IEC 61238-1.
- The connector is equipped with a turnable two-sided shear-off bolts and a specially designed nut. The bolt is rotated in the appropriate direction, and the nut is then assembled. When the specified torque is reached, the bolt will shear off and the installation is completed.
- Single core kits.

Designation	Conductor Al or Cu sector shaped mm²	Round mm²	max Ø mm	Dimensions A mm	B	C	D(Ø)	E(Ø)	Weight kg/item
SKSB 70-12	25-70	16-70	11	90	103	25	13	21.5	0.15
SKSB 150-12	95	95-150	16	103	118	30	13	27	0.25
SKSB 240-12	120-185	185-240	20	125	140	30	13	33.5	0.40
SKSB 400-16	240	300-400	25.5	166	185	37	17	41.5	0.75
SKSB 630-16	–	500-630	33	201	227	55	17	49	1.45
SKSA 95-13	–	25-95	11.6	88	103	30	13	–	0.10
SKSA 300-13	–	50-300	20.6	140	160	40	13	–	0.30
SH-SKRM 70	25-70	16-70	11	100	–	21.5	–	–	0.25
SH-SKRM 150	95	95-150	16	114	–	27	–	–	0.35
SH-SKRM 240	120-185	185-240	20	144	–	33.5	–	–	0.60
SH-SKRM 400	240	300-400	25.5	175	–	41.5	–	–	0.90
SH-SKRM 630	–	500-630	33	210	–	49	–	–	1.20

Designation	Outer diameter mm	Hole diameter mm	Thickness mm	Weight g/item
CW 3013	30	13	2	5
CW 3817	38	17	2	8

We reserve the right to alter the design and range of our products.

- Flexible for compact switchgear
- Oil in branch area prevents discharges

Cable termination, indoor for paper-insulated cable OTIA 12 kV

Use:
Indoor termination for paper-insulated 3-core cable 12 kV.

Standards:
Meets the requirements of:
– SEN 24 14 34

Rated pressure:
0.3 MPa (overpressure)

Design:
The housing is made of cross-linked HD-polyethylene (XLPE) with a transparent lower part, so that the oil level can be seen.

A spring-loaded gasket type FPA provides a seal between cable and housing, as well as electrical contact between cable screen and housing.

A GEX expansion vessel can be connected to the filling opening for the oil.

The paper-insulated cable is jointed in the upper part of the housing to a multi-wire Cu conductor with rubber insulation. The length of the connectors is 900 mm. These can be pressed with the Elpress press system. The Pfisterer press system can be used for Al conductors (for Simel press system, contact ABB Kabeldon). As an alternative, screw connection is available for Cu conductors for certain cross sections.

Designation	Conductor cross section Al	Conductor cross section Cu	Suitable spring loaded gasket	Weight
	mm²			kg/item
OTIA 152	35-240	25-240	FPA	4.1

To be ordered separately:

Designation	Description	See page
GEX	Expansion vessel	75
AK-ASA, K-ASA, K-ASB	Connecting cable	75
SKSB	Cable lug	73
FPA	Spring-loaded gasket	82

We reserve the right to alter the design and range of our products.

Accessories for OTIA

All dimensions in mm

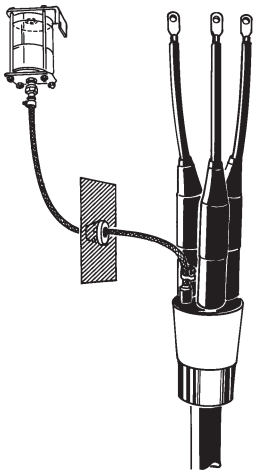

GEX 01
Expansion vessel
for one OTIA 152.

GEX 02
Expansion vessel
for two OTIA 152.

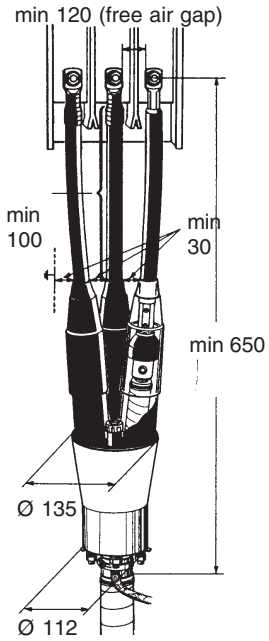

OTIA 152

Designation	For use with	Weight kg/item
GEX 01	One OTIA	2.0
GEX 02	Two OTIA	2.0

Flexible connecting cable. Each kit contains one connecting cable (length 900 mm).

Designation	Conductor cross section Al mm²	Conductor cross section Cu mm²	Cross section of connecting conductor Cu flexible mm²	Max short-circuit current kA	Max continuous rating A	Weight kg/item
Press type connecting cable						
AK-ASA 3535-9	35	–	35	6.2	200	0.6
AK-ASA 5035-9	50	–	35	6.2	200	0.6
AK-ASA 7035-9	70	–	35	6.2	200	0.6
AK-ASA 95150-9	95	–	150	16.6	350	1.2
AK-ASA 120150-9	120	–	150	16.6	350	1.2
AK-ASA 150150-9	150	–	150	16.6	350	1.2
AK-ASA 185150-9	185	–	150	16.6	350	1.2
AK-ASA 240150-9	240	–	150	26.1	500	1.8
K-ASA 185150-9	–	185	150	26.1	500	1.8
K-ASA 240150-9	–	240	150	26.1	500	1.8
Screw type connecting cable						
K-ASB 7035-9	–	35-70	35	6.2	500	0.8
K-ASB 150150-9	–	95-150	95	16.6	500	1.2

We reserve the right to alter the design and range of our products.

Cable joint and repair cable joint for paper-insulated cable SMTD 12 kV

- No special tools
- Insulating bitumen compound and insulating oil need not be heated at temperatures exceeding +10°C
- No soldering
- The oil prevents discharges in paper-insulated cable

Use:
For jointing paper-insulated lead- sheathed cables with Al or Cu conductor 12 kV, common sheath or separate lead- sheathed.

Standards:
Meets the requirements of:
– SEN 24 14 34
– SEN 24 14 23
– VDE 0278

Rated pressure:
0.3 MPa

Design:
The joint tube is a plastic-coated steel tube. The joint insulation consists of transparent polyester film and insulating oil. The oil prevents discharges in the paper-insulated cable. Spring-loaded gaskets provide a seal between the cable and the joint tube, as well as electrical contact between cable screens and joint tube. Type FPA or FP for belted cables and FPMP for separately lead-sheathed cables.

The length of the SMTD 152 LK and SMTD 153 K joint tube allows crossing of the conductors, in order to obtain the right phase sequence. The repair joint SMTD 152 RK should be completed with three extension cores, of paper- or XLPE-insulated cable (not included).

Insulating bitumen compound and insulating oil need not be heated at temperatures exceeding +10°C.

Designation	Type	Maximum Conductor cross section Al/Cu mm²	Suitable spring-loaded gasket	Joint tube Ø mm	Weight kg/item
SMTD 152 K	Standard	3x240	FPA	100	25
SMTD 152 LK*	Extended	3x240	FPA	100	27
SMTD 153 K	Standard	3x300	FP, FPMP	150	52
SMTD 152 RK**	Repair	3x240	FPA	100	39

To be ordered separately:

Designation	Description	Required Qty.	See page
FPA, FP, FPMP	Spring loaded gasket	2	82
SH-SKRM	Screw connector	3***	73

* Extended type, allows crossing of the conductors, in order to obtain the right phase sequence.
** For jointing with XLPE-conductor, three insulating materials type IG 1718 must be added (see page 84).
*** 6 connectors should be used for SMTD 152 RK.

We reserve the right to alter the design and range of our products.

Supplementary kit for SMTD

(For conversion to a transition joint)

PXS

PXSA

A. Select the basic kit, SMTD joint (see page 75) and spring-loaded gasket according to the dimension of the paper-insulated cable.

B. Select a XLPE kit, PXS or PXSA, in accordance with the following.

Designation	Conductor cross section mm²	Diameter across insulation mm	Type of termination for XLPE cable	Joint tube Ø mm	Weight kg/item
PXS 02	10-240	≤ 32	Tape	100	2.9
PXS 03	10-300	≤ 32	Tape	150	5.5
PXSA 12 A	10-35	11-15	SOT termination	100	2.6
PXSA 12	50-185	15-26	SOT termination	100	2.6
PXSA 12 W*	50-185	15-26	SOT termination	100	2.6
PXSA 22	240	25-32	SOT termination	100	2.7
PXSA 22 W*	240	25-32	SOT termination	100	2.7
PXSA 23	240-300	25-32	SOT termination	150	5.2

* For 3 x 1-core XLPE-cables with Al foil screen.

To be ordered separately:

Designation	Description	Required Qty.	See page
SH-SKRM	Connector with a partition	3	73

We reserve the right to alter the design and range of our products.

Cable joint, transition SMTXB 12 kV

- No special tools
- Insulating bitumen compound and insulating oil need not be heated at temperatures exceeding +10°C
- No soldering
- The oil prevents discharges in paper-insulated cable

Use:
For jointing paper-insulated 3-core cable and XLPE-insulated 1- or 3-core cable with Al or Cu conductors 12 kV.

Standards:
Meets the requirements of:
– SEN 24 14 34
– VDE 0278

Rated pressure:
0.3 MPa

Design:
The joint tube is a plastic-coated steel tube. The joint insulation consists of transparent polyester film and insulating oil. The oil prevents discharges in the paper-insulated cable.

A crutch seal provides a seal between the steel joint tube and the XLPE-insulated cable, which is also covered with either a prefabricated termination (SOT) or silicone tape.

Spring-loaded gaskets provide a seal between the cable and the joint tube, as well as electrical contact between cable screens and joint tube. Type FPA or FP for belted cables and FPMP for separately lead-sheathed cables.

Insulating bitumen compound and insulating oil need not be heated at temperatures exceeding +10°C.

A sealing ring for three 1-core cable is included in the kit.

Designation	XLPE-diameter mm	Conductor cross section XLPE-cable PXSA mm²	Conductor cross section XLPE-cable PXS mm²	Conductor cross section paper-insulated cable maximum mm²	Suitable spring-loaded gasket	Tube Ø mm	Weight kg/item
SMTXB 1502	≤ 32	–	10-240	240	FPA	100	28
SMTXB 1502 L*	≤ 32	–	10-240	240	FPA	100	30
SMTXB 1503	≤ 32	–	10-300	300	FP, FPMP	150	57
SMTXB 1522	15-26	50-185	–	240	FPA	100	28
SMTXB 1522 L*	15-26	50-185	–	240	FPA	100	30
SMTXB 1522 W**	15-26	50-185	–	240	FPA	100	28
SMTXB 1532	25-32	240	–	240	FPA	100	28
SMTXB 1532 L*	25-32	240	–	240	FPA	100	30
SMTXB 1532 W**	25-32	240	–	240	FPA	100	28
SMTXB 1533	25-32	240-300	–	300	FP, FPMP	150	57

* L = Extended type, allows crossing of the conductors, in order to obtain the right phase sequence.
** For 3 x 1-core XLPE-cables with Al foil screen.

To be ordered separately:

Designation	Description	Required Qty.	See page
FPA, FP, FPMP	Spring-loaded gasket	1	82
SH-SKRM	Connector with a partition	3	73

Options:

Designation	Steel tube internal Ø mm	Description	Qty.	See page
GC	100	Clamps for 3 x 1-core XLPE-cables Ø 40-45 mm	1 kit	83

We reserve the right to alter the design and range of our products.

Cable joint, transition SMTXD 24-36 kV

- No special tools
- Insulating bitumen compound and insulating oil need not be heated at temperatures exceeding +10°C
- No soldering
- The oil prevents discharges in paper-insulated cable

Use:
For jointing paper-insulated 3-core cable and XLPE-insulated 1-core or 3-core cable with Al or Cu conductors 24-36 kV.

Standards:
Meets the requirements of:
– SEN 24 14 34
– VDE 0278

Rated pressure:
0.3 MPa

Design:
The joint tube is a plastic-coated steel tube. The insulation consists of impregnated crepe paper tape and insulating oil. The oil prevents discharges in the paper-insulated cable.

The outer conductive layer of the cable is restored by conductive, impregnated crepe paper and copper net.

A crutch seal provides a seal between the steel tube and the XLPE-insulated cable, which is also covered with an oil barrier of silicone tape.

Spring-loaded gaskets provide a seal between the cable and the joint tube, as well as electrical contact between cable screens of PILC cable and joint tube. Type FP for belted cables and FPMP for separately lead-sheathed cables.

Insulating bitumen compound and insulating oil need not be heated at temperatures exceeding +10°C.

A sealing ring for three 1-core cable is included in the kit.

Designation	Conductor cross section 12/20 (24) kV	Conductor cross section 18/30 (36) kV	Dimensions of PILC cable lead sheath	Dimensions of PILC cable Cross section	Suitable spring-loaded gasket	Joint tube	Weight
	mm²		Ø mm	mm²			kg/item
SMTXD 3613	10-150	10-50	20-85	10-300	FP, FPMP	150	76
SMTXD 3623	185-240	70-150	20-85	10-300	FP, FPMP	150	76
SMTXD 3633	300	240	20-85	10-300	FP, FPMP	150	76

To be ordered separately:

Designation	Description	Required Qty	See page
FP and FPMP	Spring-loaded gasket	1	82
SH-SKRM	Connector with a partition	3	73

We reserve the right to alter the design and range of our products.

Cable joint for paper-insulated cable SMTA and SMTPA 24-52 kV

- No special tools
- Insulating bitumen compound and insulating oil need not be heated at temperatures exceeding +10°C
- No soldering
- The oil prevents discharges in paper-insulated cable

Use:
For jointing paper-insulated 3-core cable with Al or Cu conductors 24-52 kV, common sheath or separate lead-sheathed cable.

Standards:
Meets the requirements of:
– SEN 24 14 34
– SEN 24 14 23

Rated pressure:
0.3 MPa

Design:
The joint tube is a plastic-coated steel tube. The insulation consists of impregnated crepe paper tape and insulating oil. The oil prevents discharges in the paper-insulated cable. The outer conductive layer of the cable is restored by conductive, impregnated crepe paper and copper net.

Spring-loaded gaskets provide a seal between the cable and the joint tube, as well as electrical contact between cable screens and joint tube. Type FPA or FP for belted cables and FPMP for separately lead-sheathed cables.

Insulating bitumen compound and insulating oil need not be heated at temperatures exceeding +10°C.

Designation	Maximum conductor cross section Al/Cu 24 kV	36 kV	52 kV	Diameter of lead sheath min	max	Suitable spring-loaded gasket	Joint tube	Weight
	mm²			mm				kg/item
For belted cable								
SMTA 24362	3x120	3x70	–	12	63	FPA	100	25
For belted and separate lead-sheathed cable								
SMTPA 24523	3x300	3x240	3x150	20	85	FP/FPMP	150	62

To be ordered separately:

Designation	Description	Required Qty.	See page
FP, FPA, FPMP	Spring-loaded gasket	2	82
SH-SKRM	Screw connector	3	73

We reserve the right to alter the design and range of our products.

Dimensional drawings, SMT...

All dimensions in mm

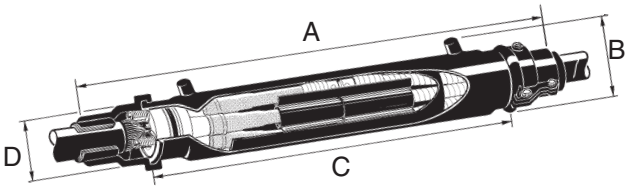

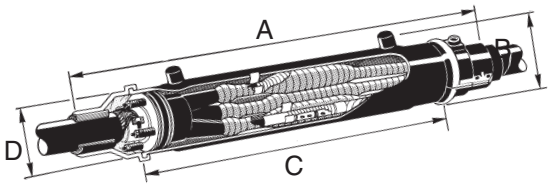

Designation	Dimensions in mm			
	A	B	C	D
SMTXB 1502	1135	175	900	100
SMTXB 1502 L	1335	175	1100	100
SMTXB 1503	1500	228	1200	150
SMTXB 1522	1135	175	900	100
SMTXB 1522 L	1335	175	1100	100
SMTXB 1522 W	1135	175	900	100
SMTXB 1532	1135	175	900	100
SMTXB 1532 L	1335	175	1100	100
SMTXB 1532 W	1135	175	900	100
SMTXB 1533	1500	228	1200	150

Designation	Dimensions in mm			
	A	B	C	D
SMTXD 3613	1500	228	1200	150
SMTXD 3623	1500	228	1200	150
SMTXD 3633	1500	228	1200	150

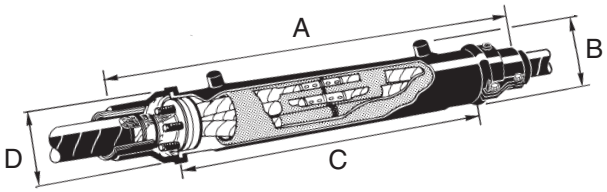

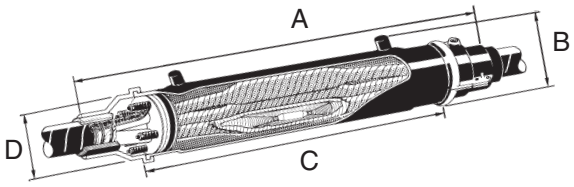

Designation	Dimensions in mm			
	A	B	C	D
SMTD 152 K	1135	175	900	100
SMTD 152 LK	1335	175	1100	100
SMTD 153 K	1500	228	1200	150
SMTD 152 RK	1935	175	1700	100

Designation	Dimensions in mm			
	A	B	C	D
For belted cable				
SMTA 24362	1335	175	1100	100
For belted or separate lead-sheathed cable				
SMTPA 24523	1500	228	1200	150

We reserve the right to alter the design and range of our products.

- No special tools
- No soldering

Spring-loaded gaskets for paper-insulated cables

The diameter of the lead sheath should be measured.

FPA
Ø 100 mm for belted cables.

FP
Ø 150 mm for belted cables.

FPMP
Ø 150 mm, 3-hole gasket, non-magnetic design for separate lead-sheathed cables.

Designation	Diameter over lead sheath mm	Weight kg/item
FPA 1021	18-21	1.2
FPA 1024	21-24	1.2
FPA 1027	24-27	1.1
FPA 1030	27-30	1.1
FPA 1033	30-33	1.1
FPA 1036	33-36	1.1
FPA 1039	36-39	1.0
FPA 1042	39-42	1.0
FPA 1045	42-45	1.0
FPA 1048	45-48	1.0
FPA 1051	48-51	1.0
FPA 1054	51-54	0.9
FPA 1057	54-57	0.9
FPA 1060	57-60	0.9
FPA 1063	60-63	0.9
FPA 1065	63-66	0.9

Designation	Diameter over lead sheath mm	Weight kg/item
FP 1530	25-30	4.2
FP 1535	30-35	4.2
FP 1540	35-40	4.3
FP 1545	40-45	4.1
FP 1550	45-50	4.2
FP 1555	50-55	3.9
FP 1560	55-60	4.1
FP 1565	60-65	4.0
FP 1570	65-70	3.9
FP 1575	70-75	3.8
FP 1580	75-80	3.9
FP 1585	80-85	4.0

Designation	Diameter over lead sheath mm	Weight kg/item
FPMP 1523	20-23	4.5
FPMP 1526	23-26	4.4
FPMP 1529	26-29	4.4
FPMP 1532	29-32	4.4
FPMP 1535	32-35	4.2
FPMP 1538	35-38	4.1
FPMP 1540	38-40	4.2

We reserve the right to alter the design and range of our products.

General accessories for paper-insulated cable joints and transition joints

GC
The kit contains one sealing ring, screws and two roomy clamp halves for Ø 100 mm joint tubes. The clamps are made from glass fibre reinforced polymer. The bolt and washer are moulded into the material. Used on the XLPE side of the transition joints SMTXB 1502/1522/1532 when installing 1-core cables with an outer diameter greater than 40 mm.

IA 2502 - 2519
Bituminized paper for filling, for example in cable clamps.

RKM 402
Funnel for oil filling.

IA 1003
Stress controlling tape.

IA 2112 - 2113
Impregnated crepe paper tape.

IKP
Impregnated carbon crepe paper (conductive).

Designation	Use	Length m	Width mm	Thickness mm	Weight kg/item
GC	SMTXB with Ø 100 joint tube	Cable Ø 40-45	–	–	0.72
IA 1003	Paper-insulated cable joint	–	–	–	0.13
IA 2112	Paper-insulated cable joint	9	10	–	0.40
IA 2113	Paper-insulated cable joint	9	24	–	0.60
IA 2502	For filling cable clamps	3	83	0.5	0.20
IA 2508	For filling cable clamps	14	200	0.5	1.40
IA 2518	For filling cable clamps	10	83	0.5	0.50
IA 2519	For filling cable clamps	14	100	0.5	0.75
IKP	–	–	–	–	0.30
RKM 402	For oil filling	–	–	–	0.10

We reserve the right to alter the design and range of our products.

Accessories for paper-insulated cable joints and transition joints

IG 1201
Cold insulating bitumen compound for cable clamps.

IG 1601, IG 1604
Insulating oil, for joints and terminations for paper-insulated cables 12-52 kV. Need not be heated at temperatures exceeding +10°C.

IG 1717, 1718
Insulating film made of transparent polyester for transition joints and for paper-insulated cables 12-24 kV, type SMTXB and SMTD.

IK 1002
Linen yarn.

IK 1003
Polyester tape.

Designation	Length m	Width mm	Volume l	Weight kg/item
IG 1201	–	–	–	1.3
IG 1601	–	–	1.0	1.0
IG 1604	–	–	4.0	4.1
IG 1717	1.7	457	–	0.3
IG 1718	1.5	711	–	0.2
IK 1002	5	–	–	0.2
IK 1003	4x1.5	2.5	–	0.1

We reserve the right to alter the design and range of our products.

- Protects bird life
- Prevents short-circuit caused by birds
- UV-resistant material

Bird protection for pole-mounted transformers, support insulators, etc

Use:
Used for bird protection on the high-voltage bushings for pole-mounted transformers. To prevent short-circuits caused by larger birds, HU is also placed on the surge arresters, but for total protection HU should be combined with an insulated down-conductor. This is done with insulation spiral HUS.

On post insulators, HU is used in combination with two wings HUF, which protect the overhead line closest to the insulator from short-circuiting.

Standards:
HU is designed for bushings with a diameter of 120-220 mm according to DIN 42531 standard.

Design:
All components are made of UV-resistant plastic.

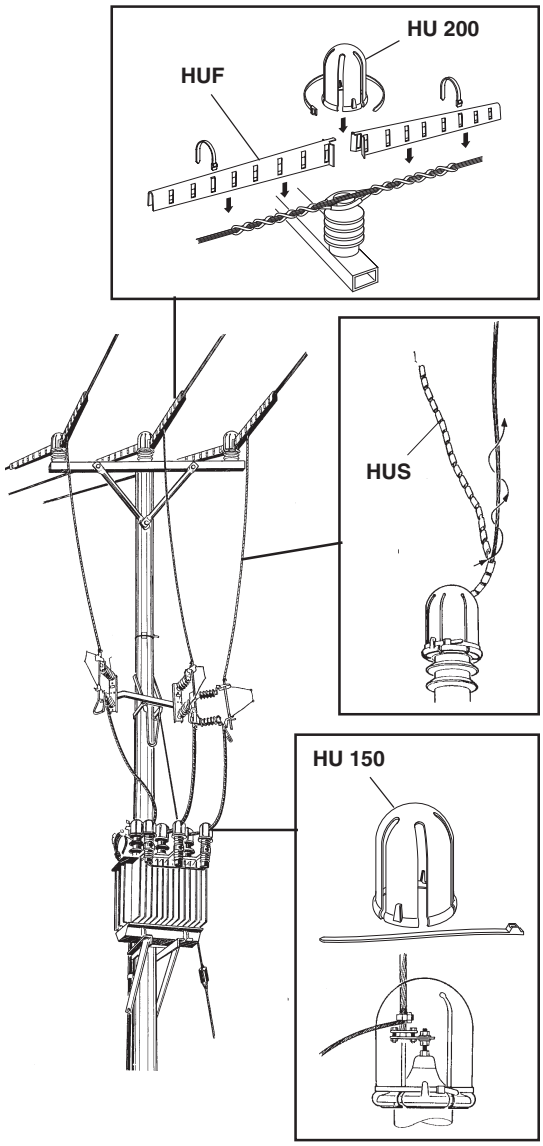

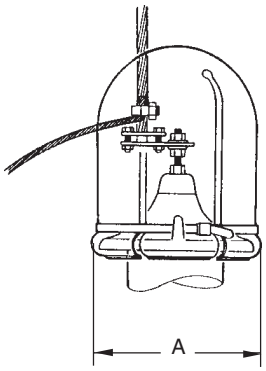

Designation	Bushing diameter A min	max	Pieces/kit	Length	Weight
	mm			m	kg/item
HU 150	120	160	3	–	0.6
HU 200	160	220	3	–	0.8
HUF	–	–	6	0.6	1.1
HUS	–	–	1	30	1.8

We reserve the right to alter the design and range of our products.

Tapes

IA 2333 - 2338
Insulating vulcanizing tape.

IA 2339
Insulating vulcanizing tape.

IA 2342
Silicon rubber tape.

IA 2343
Silicon rubber tape.

IA 2352
Semiconducting tape.

IA 2362
Filling tape.

IA 2421
Electrical tape.

IA 2441 - 2444
Protective tape.

RULLE
Two-layer insulating tape made of EPDM and butyl rubber.

Designation	Length m	Width mm	Thickness mm	Weight kg/item
IA 2333	9	38	0.8	0.50
IA 2337	9	19	0.5	0.20
IA 2338	9	38	0.5	0.40
IA 2339	2	25	0.76	0.10
IA 2342	9	25	0.5	0.16
IA 2343	2.5	25	0.5	0.30
IA 2352	4.5	19	0.8	0.10
IA 2362	1.5	38	3.2	0.30
IA 2421	10	19	0.18	0.06
IA 2441	10	25	0.4	0.20
IA 2443	10	50	0.4	0.30
IA 2444	30.5	50	0.4	0.90
RULLE 1	3.5	60	2.0	0.60
RULLE 2	5.5	60	2.0	0.90

We reserve the right to alter the design and range of our products.

Other accessories

IK 1105, 1108
Abrasive cloth.

IK 1405, IK 1406
Lashing wire (tin-coated copper wire).

IK 1401, IK 1407
Lashing wire (tin-coated copper wire).

IK 1502
Lashing wire (galvanized steel wire).

IK 2221
Silicone grease, 25 g.

IK 2233
Grease, type AP paste, 10 g.

Designation	Length m	Diameter mm	Coarseness	Weight kg/item
IK 1105	1	–	120	0.1
IK 1108	1	–	220	0.1
IK 1401	2	1.4	–	0.1
IK 1405	5	1.4	–	0.1
IK 1406	9.5	1.4	–	0.2
IK 1407	6	1.0	–	0.2
IK 1502	4	1.5	–	0.1
IK 2221	–	–	–	0.03
IK 2233	–	–	–	0.02

We reserve the right to alter the design and range of our products.

Other accessories

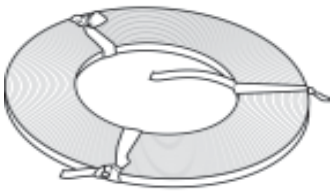

IA 1701
Earthing braid, sold by the metre, 10 mm².

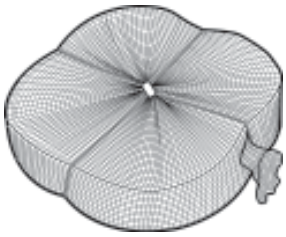

IA 1706
Copper net for e.g. SMXB, sold by the metre, approx. 10 mm².

IA 1710
Earthing braid with lining, 22 mm².

IK 2230
Washing cloth, 3 alcohol-soaked paper cloths 200 x 300 mm.

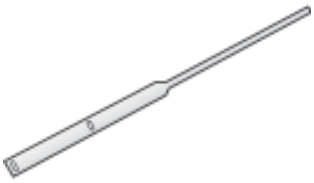

MBR 250
Stainless marking tape, 100 units/kit.

SKALUS
Peeling string for XLPE insulation.

Designation	Length m	Width mm	Thickness mm	Weight
IA 1701	–	16	1.0	0.10 kg/m
IA 1706	–	80	1.0	0.06 kg/m
IA 1710	0.4	27	0.1	0.09 kg/unit
IK 2230	–	–	–	0.03 kg/unit
MBR 250	0.25	–	1.0	0.50 kg/kit
SKALUS	2	–	1.0	0.02 kg/unit

We reserve the right to alter the design and range of our products.

Tools

730 R
Torque wrench for screw connectors, screw cable lugs, overhead line clamps, etc. Supplied with 7 mm socket head, extension and 8 mm internal hexagon head.
Torque range 6-50 Nm.

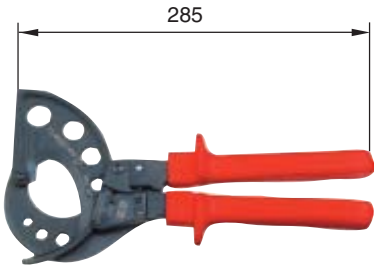

Intercable No. RKS 1607 054
Cable shears for cutting cable Ø max 54 mm.

RKM 1055
Splitting tool for longitudinal splitting off XLPE insulation with Ø 10-55 mm.

RKM 670
Cable knife, 30 mm blade.

RKM 672
Sheath removing knife with two handles for plastic sheated cable.

Designation	Description
730 R	Torque wrench
RKS 1607 054	Cable shears
RKM 1055	Peeling tool
RKM 670	Cable knife
RKM 672	Sheath removing knife

We reserve the right to alter the design and range of our products.

Tools

Intercable No. AV 6220
Sheath removing tool for
PE-sheathed cable Ø > 20 mm.

Intercable No. FBS 1722 1
Stripping tool for the vulcanized, outer conducting layer of XLPE-insulated cable Ø 10-52 mm.
The tool is supplied in a rigid case with a tube of silicone grease.

GB-M20
Cutting tool for cable sheath and XLPE insulation:
Diameter: Ø 15-50 mm
Cutting depth: ≤ 8 mm

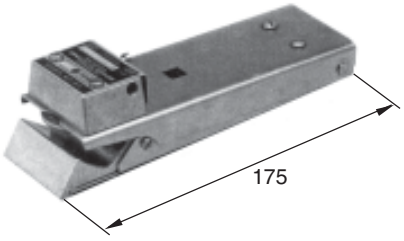

Model 1700 Series
Peeling tool for strippable outer conductive layer on XLPE insulated cable Ø 13-51 mm.

Designation	Description
AV 6220	Sheath removing tool
FBS-1722 1	Stripping tool
GB-M20	XLPE stripping tool
Model 1700 Series	Peeling tool

We reserve the right to alter the design and range of our products.

Table of contents
Cable accessories 52-420 kV

Page No.

Introduction cable accessories 52-420 kV 92
Cable termination, outdoor, porcelain APED 36-84 kV / composite APED P 72 kV 93
Cable termination, outdoor porcelain APECB 84-420 kV / composite APECB P 84-300 kV ... 96
Cable termination, outdoor versatile APSEA 52-72 kV 99
Cable termination, APEGA GIS 84-420 kV 102
Cable termination, APEGA TRF 84-420 kV 105
Cable joint, prefabricated JS 52-123 kV, JX 52-123 kV 107
Cable joint, taped SMX 52-145 kV 111
Cable joint, prefabricated SMPGB, SMPGB-C, SMPGB BOX 145-170 kV 114
Cable joint, prefabricated SMPGB 362-420 kV 117
Earth kits for cable terminations 119
Tools and oil 120

We reserve the right to alter the design and range of our products.

Introduction
Cable accessories 52-420 kV

ABB Kabeldon has long experience in the area of 52-420 kV and has always led the field in research and development. We were among the first in the world to use stress cone technology to control electrical fields.

One reason for our success is that we have constantly developed accessories for all types of cables. This has given us an experience base that is both broad and deep.

We have also developed our accessories to facilitate for optical fibre in power cables, and even integrated cross bonding in cable joints. This involve system designers to improve their systems.

For more than 20 years we have had our own testing station to evaluate outdoor performance.

One feature that sets apart our range of accessories for this voltage range is their modular design. This makes the accessories unusually easy to install.

The installers become familiar with the components, and this reduces the risk of mistakes.

Unless otherwise specified, the cable accessories are supplied as standard with screw connection for conductors.

Another advantage is that our cable terminations can be assembled on the ground under controlled conditions and then lifted into place, - simple and safe!

We offer training courses for installers and supervisors. For training prospectus, contact our training department.

Assembling premoulded cable joints, SMPGB-C.

Assembly of premoulded cable joint JS.

Our cable terminations can be mounted with care horizontally on the ground and then lifted into place, both easily and safely!

We develop accessories for most cable designs, including cable with optical fibre.

We reserve the right to alter the design and range of our products.

- Reliable
- Proven
- Screw technology
- Can be assembled horizontally on the ground before installation
- Composite insulator, low weight

Cable termination, outdoor porcelain, APED 36-84 kV composite, APED P 36 and 72 kV

Use:
Suitable for installations in which the termination must be used as a fixed connection point and for installations where there is a risk of continuous very high creepage currents.

Standards:
Meets the requirements of:
SS, IEC, IEEE

Design:
The cable termination consists of a porcelain or composite insulator installed on a box body made of Al castings.

The box body consists partly of insulating material, which provides insulated installation. The base part must be installed on a bracket.

The field control component is a prefabricated stress cone.

The insulator has sheds of the short-long type and is filled with synthetic insulating oil. The porcelain insulator can be ordered in brown or grey.

The composite insulator is only available in grey.

A supporting plate with three stand-off insulators are used for an insulated mounting.

The maximum permissible diameter across the oversheath of the cable is 85 mm. The diameter across the prepared insulation must be 25-66 mm. Maximum cable cross section is 1200 mm^2.

The top bolt with a diameter of 30 mm, is included in the kit. Select between screw, press or welding type.

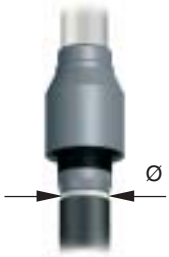

Prepared insulation
Ø 25-66 mm

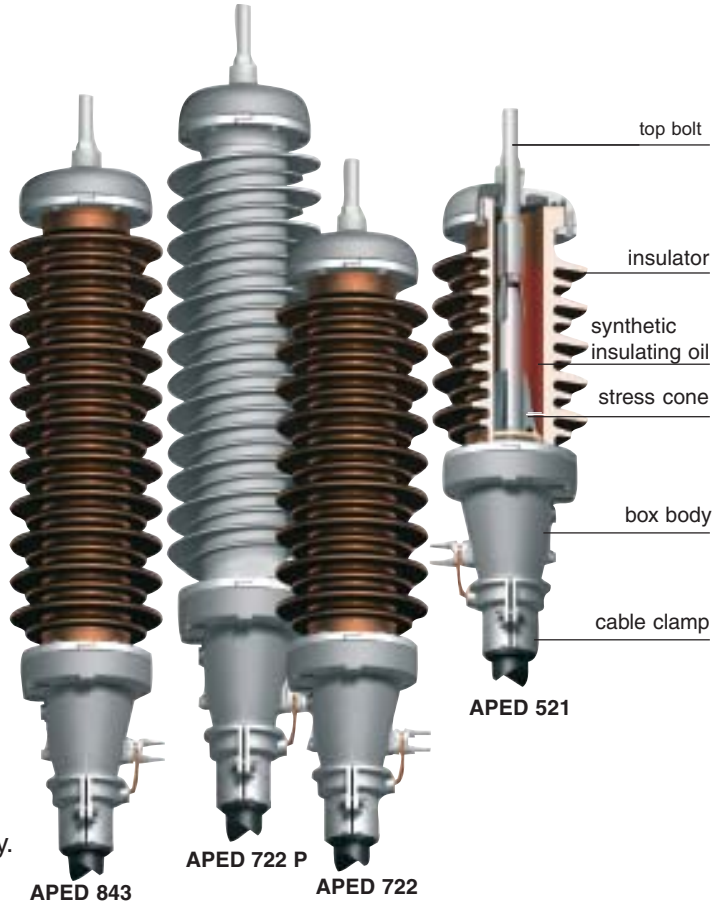

Installation:
Installation can be simplified by assembling the termination horizontally on the ground before lifting it into place.

The following cable data should be quoted when ordering:
- *Voltage*
- *Conductor cross section*
- *Conductor material Cu or Al*
- *Diameter across prepared insulation*
- *Screen, cross section and type*
- *Outer diameter of the cable*

Type of top bolt:
- *Screw (standard)*
- *Press*
- *Weld*

We reserve the right to alter the design and range of our products.

Technical specification APED

All dimensions in mm

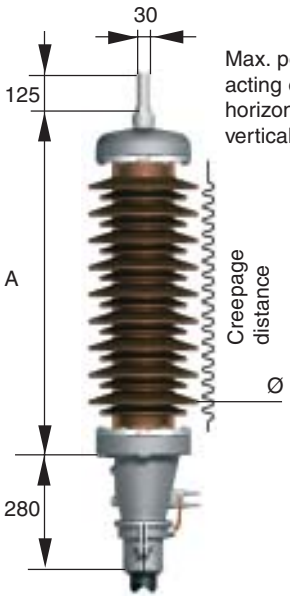

Max. permissible forces acting on the top bolt, horizontally and vertically: 2000 N.

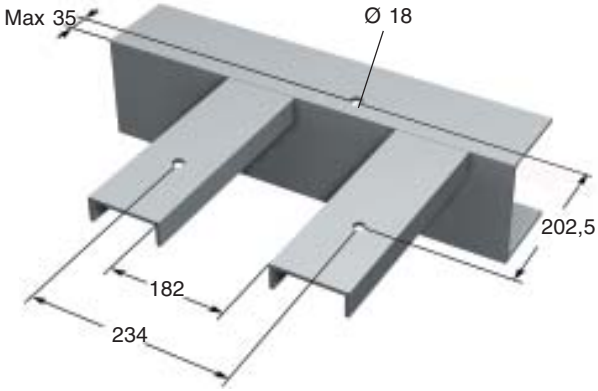

Attachment to bracket for insulated mounting
Three 18 mm hole for M16 bolts.

There are three versions of insulators for APED 36-84 kV:

- *Without suffix: Brown porcelain in traditional design.*
- *With suffix G: Grey porcelain in traditional design*
- *With suffix P: Grey rubber with a fibreglass-reinforced epoxy, light-weight and less sensibility for outer damages. (only for 36 and 72 kV)*

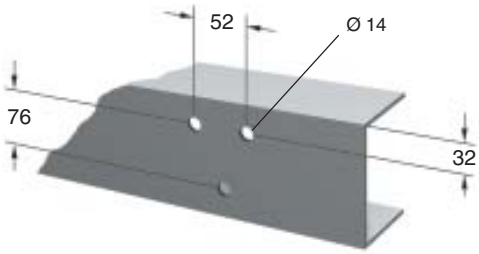

Attachment to beam
Three 14 mm hole for M10 bolts.

Designation	Voltage kV	Insulator	Creepage distance min mm	Dimensions A mm	Dimensions Ø mm	Net weight kg/item
APED 360	12-36	Porcelain	915	530	267	38
APED 521	52	Porcelain	1340	645	267	48
APED 722	72	Porcelain	2200	925	267	60
APED 843	84	Porcelain	2635	1040	267	67
APED 360 P	36	Composite	950	570	270	27
APED 722 P	72	Composite	2330	950	270	33

We reserve the right to alter the design and range of our products.

Applications and accessories APED

Inclination up to 30°.

GAP-APED
Rod gap.

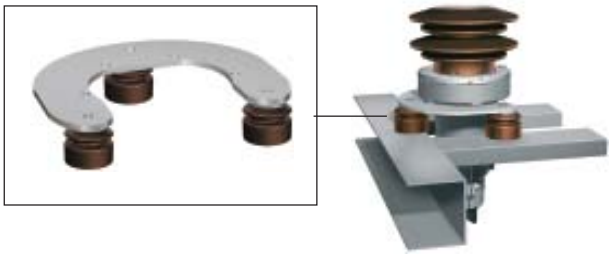

PIU-APED
Post insulator kit for fixing to a supporting plate for insulated installation.

RE-APED-T
Re-assembly kit for APED-T
(for XLPE Ø 25-48.1 mm).

RE-APED-M
Re-assembly kit for APED-M
(for XLPE Ø 48-66 mm).

To be ordered separately:

Designation	Description	Use	See page
GAP-APED	Rod gap	Protects against over-voltage.	95
PIU-APED	Post insulator kit	When insulated mounting.	95
RE-APED-M **RE-APED-T**	Re-assembly kit	Used for re-assembly of a termination. (Stress cone and top bolt to be ordered separately as required).	95
JSA	Earthing kit	For cable with metallic screen. Not needed when cable has only Cu wire screen.	119
SCK	Screen connection	For radial waterproof cable with Al-foil and Cu wire screen.	119

We reserve the right to alter the design and range of our products.

- Reliable
- Proven
- Screw technology
- Can be assembled horizontally on the ground before installation
- Will fit large cables
- Low total weight
- Integrated insulated installation
- Few components

Cable termination, outdoor porcelain APECB 84-420 composite APECB 84-300 P

Use:
For installations in which the termination is to be used as a fixed connection point and in installations where there is a risk of continuous very high creepage currents.

Standard:
Meets the requirements of:
SS, IEC, IEEE

Design:
The cable termination consists of a porcelain or composite insulator installed on a box body made of Al castings.

The box body consists partly of insulating material, which provides insulated installation. The base part must be installed on a bracket.

For 420 kV post-insulator kit must be used.

The field control component is a prefabricated stress cone.

The insulator has sheds of short-long type and is filled with synthetic insulating oil.

The porcelain insulator can be ordered in brown or grey. The composite insulator is only available in grey for 84-300 kV.

For the maximum permitted diameter across the oversheath of the cable and the diameter across prepared insulation, see the table below.

A screw clamp in the top fitting is used to connect the conductor to the top bolt. Top bolt and screw clamp are included in the kit.

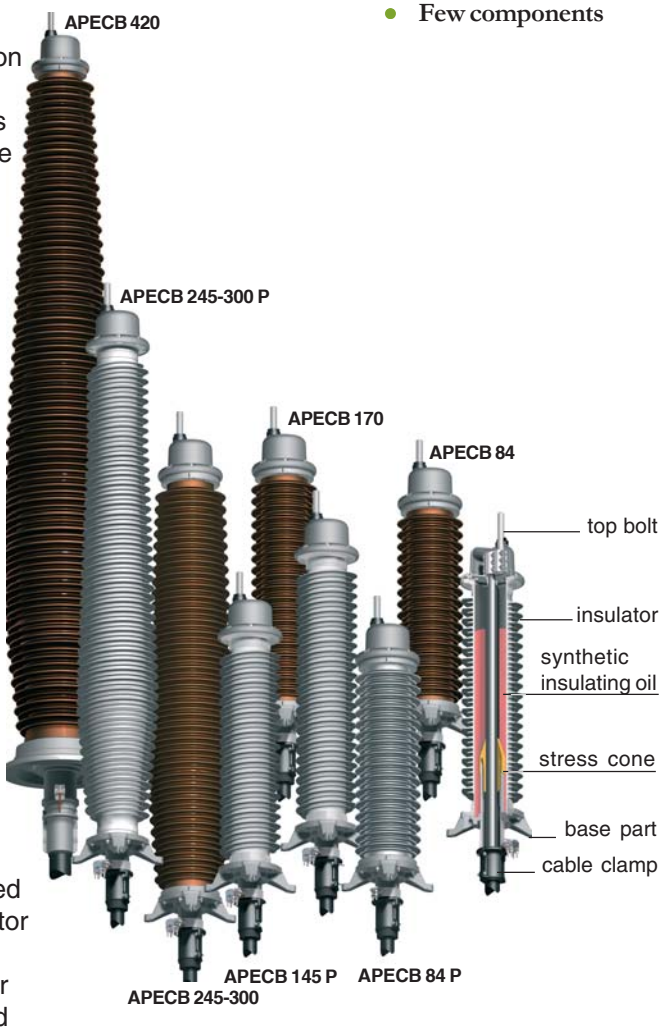

Installation:
Installation can be simplified by assembling the termination horizontally on the ground before lifting it into place.

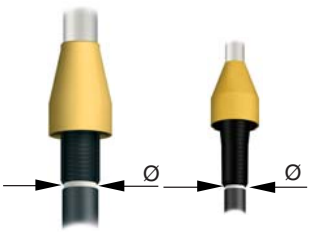

APECB 245
APECB 300
APECB 420

APECB 84
APECB 145
APECB 170

Prepared insulation

Voltage kV	XLPE-diameter Ø mm min	XLPE-diameter Ø mm max	Outer sheath Ø mm
≤ 170	45.5	107	170
245	45.5	120	170
300	80	120	170
420	80	120	170

When ordering, please state the following ordering data:
- *Voltage*
- *Conductor cross section, diameter*
- *Diameter across prepared insulation*
- *Screen, cross section and type (optical fibres)*
- *Outer diameter of cable*
- *Insulator, porcelain or composite*
- *Top bolt:*
  - *Diameter and material (Cu or Al) for connecting to overhead power line*
  - *Contact technology, screw*

We reserve the right to alter the design and range of our products.

Technical specification APECB, APECB P

All dimensions in mm

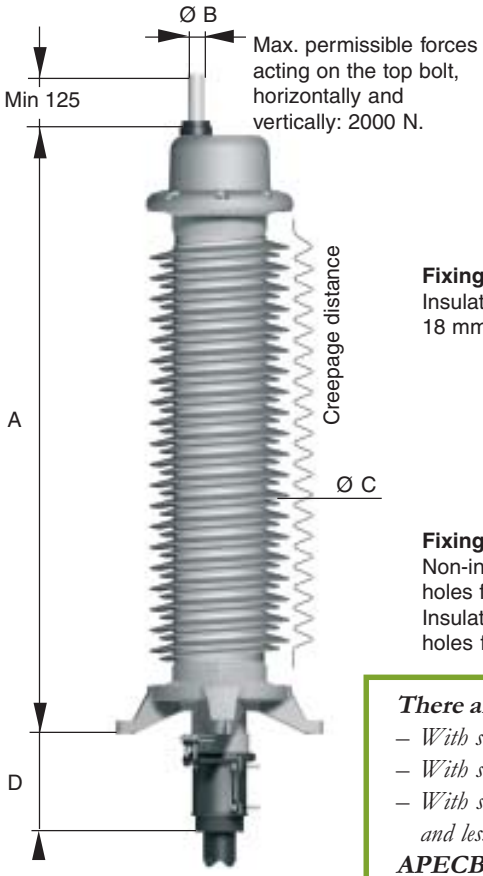

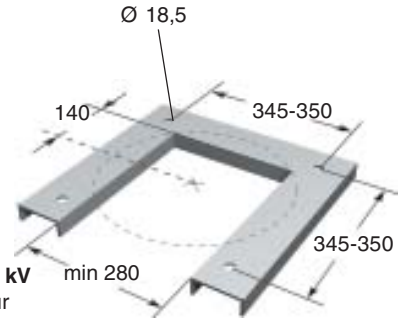

Fixing to bracket for 84-300 kV
Insulated or non-insulated: four 18 mm holes for M16 bolts.

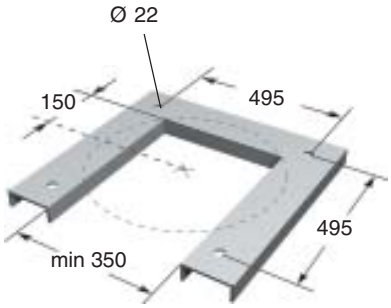

Fixing to bracket for 420 kV
Non-insulated: four 18 mm holes for M16 bolts.
Insulated: four 22 mm holes for M20 bolts.

There are three versions of insulators for APECB 84-300 kV:
- *With suffix B: Brown porcelain in traditional design.*
- *With suffix G: Grey porcelain in traditional design*
- *With suffix P: Grey rubber with a fibreglass-reinforced epoxy, light-weight and less sensibility for outer damages.*

APECB 420 kV is available only with brown porcelain!

Designation*	Voltage	Insulator	Dimensions A	ØB	ØC	D	Creepage distance min	Net weight
	kV		mm				mm	kg/kit
APECB 841	84	Porcelain	1300	40/50/54/60	386	235	2710	160
APECB 1452	145	Porcelain	1620	40/50/54/60	386	235	3870	185
APECB 1703	170	Porcelain	1860	40/50/54/60	386	235	4570	220
APECB 1704	170	Porcelain	2120	40/50/54/60	396	235	5500	230
APECB 1705	170	Porcelain	2620	40/50/54/60	396	235	7250	325
APECB 2456	245	Porcelain	2570	40/50/54/60	520	235	8300	515
APECB 3006	300	Porcelain	2570	40/50/54/60	520	235	8300	515
APECB 4201	420	Porcelain	4575	40/50/54/60	760	500	14700	1700
APECB 841 P	84	Composite	1320	40/50/54/60	359	235	2820	100
APECB 1452 P	145	Composite	1620	40/50/54/60	359	235	3750	105
APECB 1703 P	170	Composite	1820	40/50/54/60	359	235	4500	110
APECB 1704 P	170	Composite	2140	40/50/54/60	359	235	5950	120
APECB 1705 P	170	Composite	2720	40/50/54/60	359	235	8000	135
APECB 2456 P	245	Composite	3030	40/50/54/60	490	235	9360	290
APECB 3006 P	300	Composite	3030	40/50/54/60	490	235	9360	290

* When the cable diameter is greater than 120 mm, add:
Ø 170 at the end of the designation (e.g. APECB 841 Ø 170).
For 245 kV add even OKT when the cable has optical fibre. For 84-170 kV and 300-420 kV see next page!

We reserve the right to alter the design and range of our products.

Applications and accessories APECB, APECB P

Inclination up to 30°.

GAP-APEC
Rod gap.

OKT
Opto kit for cables with integrated optical fibres in the earth screen.

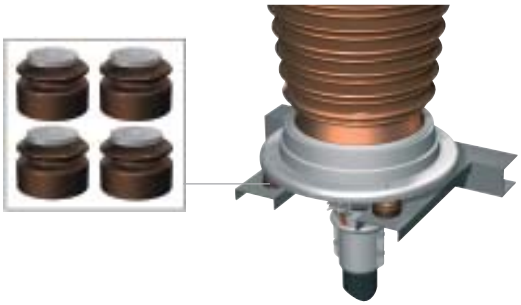

PIU-APEC
Post insulator kit for fixing APECB 420 kV when insulated mounting.

To be ordered separately:

Designation	Description	Use	See page
GAP-APEC	Rod gap	Protection against over-voltage 84-170 kV.	98
OKT	Optofibre kit	For optical fibres in the screen of the cable 84-420 kV.	98
PIU-APEC	Post insulator	For fixing APECB 420 when insulated mounting	98
JSA	Earthing kit	For cable with metallic screen. Not needed if cable has only Cu wire screen.	119
SCK	Screen connection	For radial waterproof cable with Al foil and Cu-wire screen.	119

We reserve the right to alter the design and range of our products.

Cable termination outdoor, versatile APSEA 52-72 kV

- Cold-applied
- Prefabricated for easy installation
- Versatile can be completed by several sheds
- Can be used with cable drum for mobile transformer station
- Screw technology
- Can be installed at any angle
- Can be used as bushing on the wall with two APSEA and a cable between them

Use:
Suitable for installations in which the termination can be installed in any angle. The termination is not self-supporting.

Standards:
Meets the requirements of:
SS and IEC.

Design:
The cable termination is made up of modules comprising a field controlling stress cone, sheds to increase the creepage distance and a top cap.
The diameter across the prepared insulation is 33-66 mm. Top bolt or cable lug is to be ordered separately. Top bolt see page 101.

Installation:
The termination is installed easily, entirely without heat. The stress cone and sheds are to be threaded onto the cable and "snapped" together.
Installation can be simplified by assembling the termination horizontally on the ground and then lifting it into place.

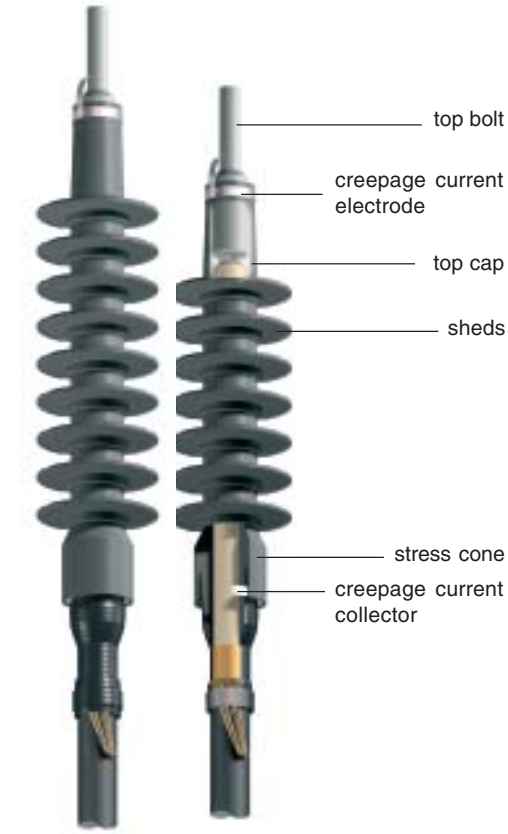

APSEA 72 APSEA 52

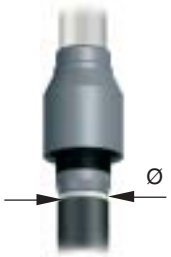

Prepared insulation
Ø 25-66 mm

The following cable data should be quoted when ordering:
- *Voltage*
- *Conductor cross section*
- *Conductor material Cu or Al*
- *Diameter across prepared insulation*
- *Screen, cross section and type*
- *Outer diameter of the cable*

Type of top bolt:
- *Screw (standard)*
- *Press*
- *Weld*

We reserve the right to alter the design and range of our products.

Technical specification APSEA

All dimensions in mm

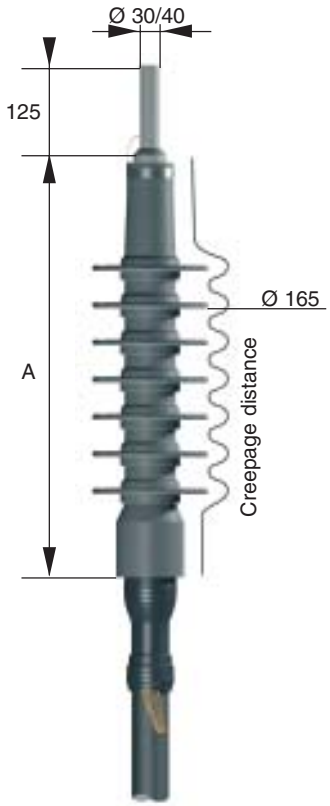

Designation	Voltage kV	Prepared insulation Ø mm	Creepage distance min mm	Length A mm	Net weight kg/item
APSEA 521 U	52	33-38	1150	580	4
APSEA 522 U	52	36-39,5	1150	580	4
APSEA 523 U	52	39,5-43	1150	580	4
APSEA 524 U	52	43-48	1150	580	4
APSEA 525 U	52	48,0-54,0	1150	580	4
APSEA 526 U	52	54,0-60,0	1250	650	4
APSEA 527 U	52	60,0-66,0	1250	650	4
APSEA 721 U	72	33-38	1420	690	5
APSEA 722 U	72	36-39,5	1420	690	5
APSEA 723 U	72	39,5-43	1420	690	5
APSEA 724 U	72	43-48	1420	690	5
APSEA 725 U	72	48,0-54,0	1790	870	5
APSEA 726 U	72	54,0-60,0	1790	870	5
APSEA 727 U	72	60,0-66,0	1790	870	5

We reserve the right to alter the design and range of our products.

Applications and accessories APSEA

Can be installed at any angle.

A/K-TBF SKR
Top bolt

Top cap, THSA

XLPE Ø range	Ø Top hole	Top cap designation
33-48 mm (APSEA 521-524, APSEA 721-724)		
	28	THS 28
	37	THS 37
	47	THS 47
	60	THS 60
48-66 mm (APSEA 525-527, APSEA 725-727)		
	28	THSA 28
	37	THSA 37
	47	THSA 47
	60	THSA 60

Select top cap based on the APSEA size and with a hole that matches the outer diameter of the available cable lug or top bolt.

Top bolts:

Designation	Cable conductor material	Cable cross section mm²	Diameter A mm	Diameter B mm	Net weight kg/kit
A-TBF 30 120 SKR	Al	120	30	45	0.5
A-TBF 30 185 SKR	Al	185	30	45	0.5
A-TBF 30 240 SKR	Al	240	45	50	0.8
A-TBF 30 400 SKR	Al	400	30	55	0.8
A-TBF 30 500 SKR	Al	500	30	60	0.9
A-TBF 30 630 SKR	Al	630	30	60	0.9
A-TBF 40 800 SKR	Al	800	40	65	1.2
A-TBF 40 1000 SKR	Al	1000	40	65	1.2
A-TBF 40 1200 SKR	Al	1200	40	65	1.1
K-TBF 30 120 SKR	Cu	120	30	45	1.6
K-TBF 30 185 SKR	Cu	185	30	45	1.6
K-TBF 30 240 SKR	Cu	240	45	50	2.4
K-TBF 30 400 SKR	Cu	400	30	55	2.4
K-TBF 30 500 SKR	Cu	500	30	60	2.8
K-TBF 30 630 SKR	Cu	630	30	60	2.8
K-TBF 40 800 SKR	Cu	800	40	65	4.0
K-TBF 40 1000 SKR	Cu	1000	40	65	3.8
K-TBF 40 1200 SKR	Cu	1200	40	65	3.5

To be ordered separately:

Designation	Description	Use	See page
Cable lug	Cable lug	–	–
UKR	Universal clamp	For fixing cables.	123
JSA	Earthing kit	For cable with metallic screen. Not needed if cable has only Cu wire screen.	119
SCK	Screen connection	For radial waterproof cable with Al foil and Cu-wire screen.	119

We reserve the right to alter the design and range of our products.

- Reliable
- Proven technique
- Screw technology
- Can be assembled horizontally on the ground before installation
- Flexible, fits big cables

Cable termination for (GIS) and for transformator (TRF) APEGA 84-420 kV

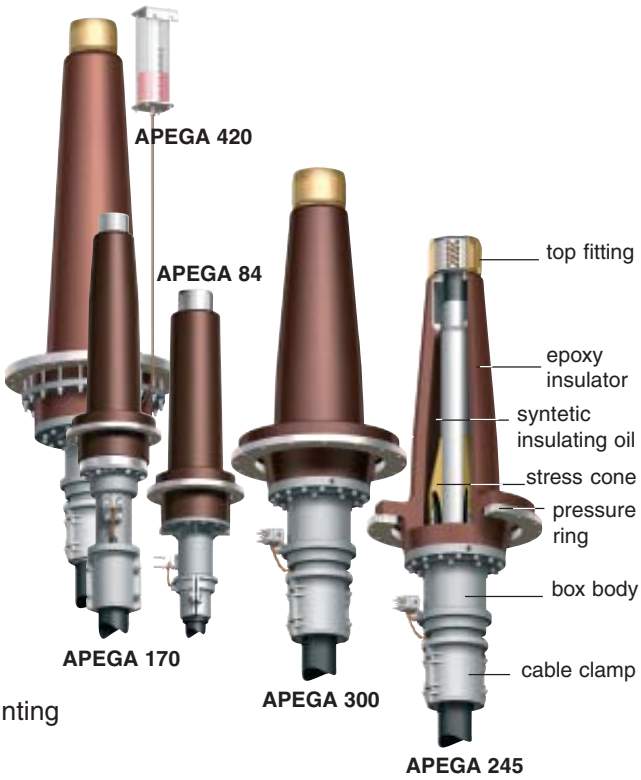

Use:
Suitable for installations where the termination must be used as a fixed connection point in gas-insulated switchgear or in transformers without a separate cable box or where the cable box is filled with transformer oil.

Standards:
Meets the requirements of:
SS, IEC, IEEE

Design:
The cable termination consists of an epoxy insulator standing on a base made of aluminium alloy.

The field controlling component is a stress cone made of rubber.

The insulator is filled with synthetic insulating oil. A flange for insulated mounting is integrated in the epoxy insulator.

A pressure ring is also included, see next page.

For the maximum permissible diameter across the sheath of the cable and the diameter across the prepared insulation, see table below.

Installation:
Installation can be simplified by assembling the termination horizontally on the ground and then lifting it into place.

Voltage	XLPE-Ø		Oversheath
	min	max	Ø
kV	mm	mm	mm
84	25	66	85
170	45.5	100	150
245	73	120	160
300	73	120	160
420	73	120	160

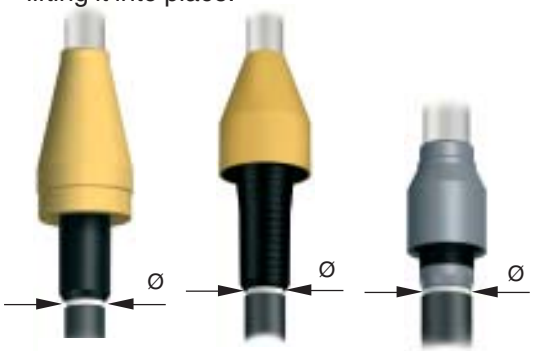

APEGA 245
APEGA 300
APEGA 420

APEGA 170
Prepared insulation

APEGA 84

The following cable data should be quoted when ordering:
- *Voltage*
- *Conductor cross section*
- *Conductor material Cu or Al*
- *Diameter across prepared insulation*
- *Screen, cross section and type (possibly optical fibre)*
- *Outer diameter of the cable*

Type of connector:
- *Screw (standard)*
- *Weld (up to 170 kV)*

We reserve the right to alter the design and range of our products.

Technical specification APEGA

All dimensions in mm

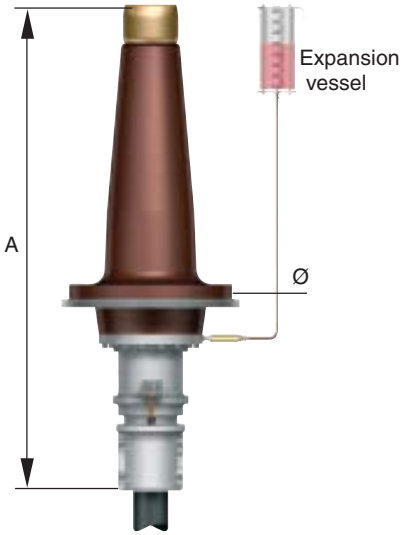

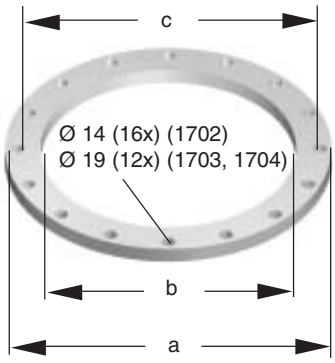

Pressure ring for APEGA 170

APEGA	a	b	c
1702	440	358	400
1703*	345	270	320
1704	310	259	288

* Other dimensions on request.

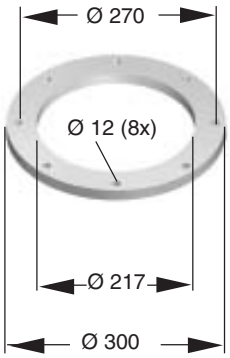

Pressure ring for:
APEGA 84 kV.

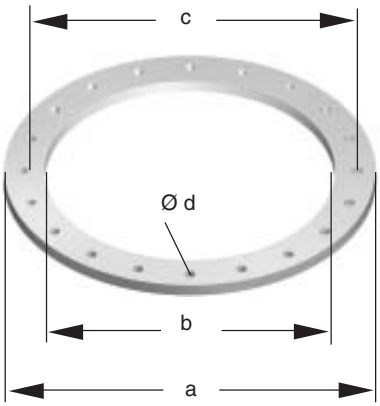

Pressure ring for:
APEGA 245-420 kV.

APEGA	a	b	c	d
245-300	559	270	582	18 (20x)
400	570	464	535	14 (20x)

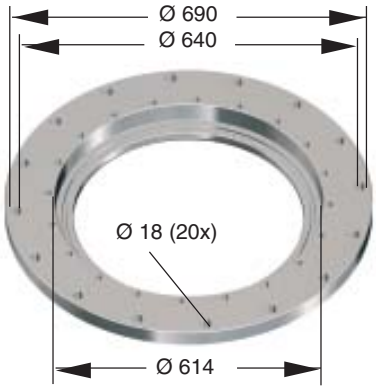

AF 420
Adapter flange for APEGA 420 kV.

Designation	Voltage kV	Standard	Dimensions A mm	Dimensions Ø mm	Net weight kg/item
APEGA 841	84	IEC 60859	1029	245	55
APEGA 1702	170	–	1460	385	90
APEGA 1703	170	IEC 60859	1467	298	75
APEGA 1704	170	–	1460	265	75
APEGA 2456	245	IEC 60859	1680	450	270
APEGA 3006	300	IEC 60859	1680	450	270
APEGA 4202	420	IEC 60859*	2175	614	400

* With adapter flange AF 420.

We reserve the right to alter the design and range of our products.

Tools and accessories APEGA

SPV 1
Panduit pliers for bundle tape APEGA 170 kV.

RE-APEGA
Re-assembly kit.

SPT 1
Circlip pliers for installation of top fitting.

OKT
Optofibre kit for cables with integrated optical fibres in the earth screen.

DMT 1
Top fitting removal kit.

To be ordered separately:

Designation	Description	Use
SPV 1	Panduit pliers	For installation of bundle tape around stress cone.
SPT 1	Circlip pliers	When installing top fitting.
OKT	Optofibre kit	For cables with integrated optical fibres in the earth screen
RE-APEGA	Re-assembly kit	Used for re-assembly of a termination. (stress cone and top bolt must be ordered separately as required).
DMT 1	Top fitting removal kit	When removing top fitting.
JSA	Earthing kit	For cable with metallic screen (see page 119). Not needed if cable has only Cu wire screen.
SCK	Screen connection	For Al foil radial waterproof and Cu-wire screen cable (see page 119).

We reserve the right to alter the design and range of our products.

Technical specification, accessories for connecting APEGA 84-170 kV TRF to a transformer

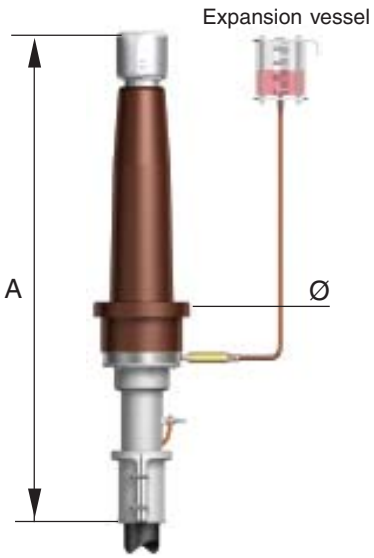

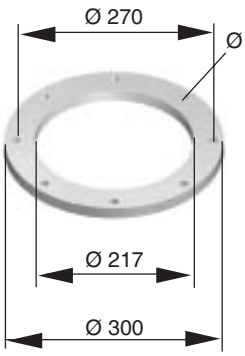

Pressure ring for APEGA 841.

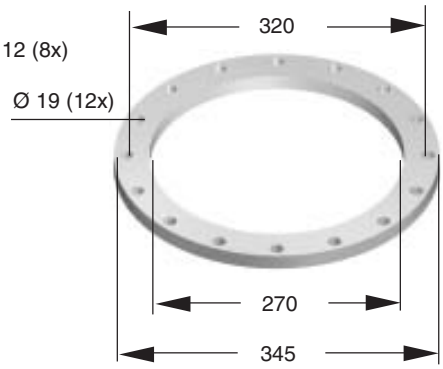

Pressure ring for APEGA 1703.

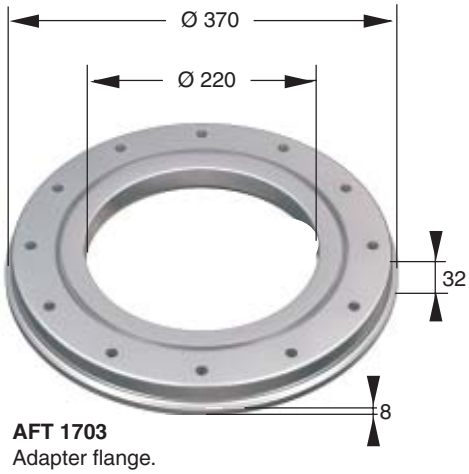

AFT 1703
Adapter flange.

Designation	Voltage kV	Dimensions standard	Dimensions A mm	Dimensions Ø mm	Weight kg/item
APEGA 841 TRF	84	EN 50299	1150	245	55
APEGA 1703 TRF	170	EN 50299	1460	298	75

Designation	Description	Use
AFT 1703	Adapter flange	Adapter flange to be welded between termination and transformer

We reserve the right to alter the design and range of our products.

Technical specification, accessories when connecting APEGA 245-420 kV to a transformer

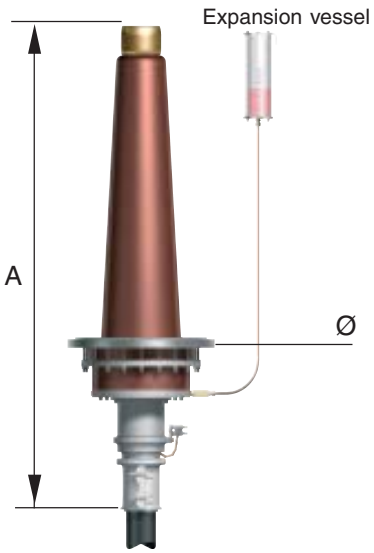

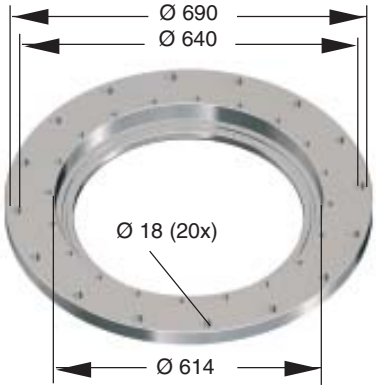

AF 420
Adapter flange for APEGA 420 kV.

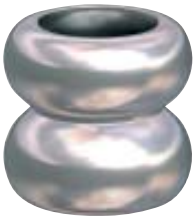

CST 245-420
Corona shield for installing
APEGA 245-420 kV in transformer.

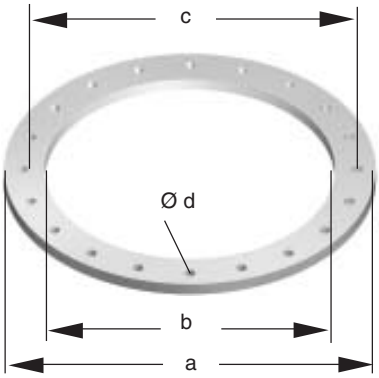

Pressure ring for:
APEGA 245-420 kV.

APEGA	a	b	c	d
245-300	559	270	582	18 (20x)
400	570	464	535	14 (20x)

Designation	Voltage kV	Dimensions standard	Dimensions A mm	Dimensions Ø mm	Weight kg/item
APEGA 245	245	EN 50299	1840	450	270
APEGA 300	300	EN 50299	1840	450	270
APEGA 420	420	EN 50299	2335	614	400

To be ordered separately:

Designation	Description	Use
CST 245-420	Corona shield	For installing APEGA 245-420 kV in transformer

We reserve the right to alter the design and range of our products.

- Prefabricated for safe and easy installation
- Active pressure
- Reliable
- Joint bodies routine-tested according to IEC
- Screw technology
- Compact joint for minimal cable stripping

Premoulded cable joints 52-123 kV with or without sheath sectionalizing JS or JX

Use:
For jointing XLPE- or EPR-insulated 52-123 kV cables with Al or Cu conductors and different cable sheath.

Standards:
Meets the requirements of:
- IEC 60840
- Annex H

Design:
Premoulded three-layer rubber body: conductive / insulating / conductive.

The joints are available either as straight through joints (JS) or with integrated sheath sectionalizing (JX).

The joints are supplied with screw cable connector and heat-shrink oversheath.
A torque wrench, mounting kit, installation cone, installation tool, RKM 123 and saw, RKM 850 are needed for assembling.

For diameter across the prepared insulation and conductor cross section, see table below.

JS
Premoulded straight through joint.

JX
Premoulded cable joint with sheath sectionalizing.

Designation	Oversheath Ø mm	Installation tube* Ø mm
Installation kit 63	< 51	63
Installation kit 75	51-63	75
Installation kit 83	63-70	83
Installation kit 90	70-77	90
Installation kit 100	77-86	100
Installation kit 110	86-95	110
Installation kit 125	95-109	125

* Installation tube must be chosen according to diameter of the cable oversheath.

For essential equipment for installion, see page 110!

Voltage kV	XLPE-Ø min mm	XLPE-Ø max mm	Over-sheath Ø mm	Conductor cross section mm²
52	33	75	Max 95	150-1600
72	33	75	Max 95	150-1600
123	46	100	Max 109	150-2500

When ordering, please state the following ordering data:
- *Voltage*
- *Conductor cross section*
- *Conductor material Cu or Al*
- *Diameter across prepared insulation*
- *Diameter across conductor*
- *Screen, cross section and type*
- *Outer diameter of the cable*

We reserve the right to alter the design and range of our products.

Technical specification
JS-A 52-123 kV

All dimensions in mm

Designation	XLPE-diameter mm	Dimensions L mm	Dimensions Ø mm	Net weight kg/kit
Copper wire screen				
JS-A 05210 C	33-38	1460	140	25
JS-A 05211 C	38-42	1460	140	25
JS-A 05212 C	42-47	1460	150	25
JS-A 05213 C	47-54	1460	150	25
JS-A 05214 C	54-63	1460	170	25
JS-A 05215 C	63-75	1460	170	25
Metal-PE laminated (PAL)				
JS-A 05210 P	33-38	1460	140	25
JS-A 05211 P	38-42	1460	140	25
JS-A 05212 P	42-47	1460	150	25
JS-A 05213 P	47-54	1460	150	25
JS-A 05214 P	54-63	1460	170	25
JS-A 05215 P	63-75	1460	170	25
Metal screen lead, corrugated copper				
JS-A 05210 M	33-38	1460	140	25
JS-A 05211 M	38-42	1460	140	25
JS-A 05212 M	42-47	1460	150	30
JS-A 05213 M	47-54	1460	150	30
JS-A 05214 M	54-63	1460	170	30
JS-A 05215 M	63-75	1460	170	30

Designation	XLPE-diameter mm	Dimensions L mm	Dimensions Ø mm	Net weight kg/kit
Copper wire screen				
JS-A 07210 C	33-38	1460	140	25
JS-A 07211 C	38-42	1460	140	25
JS-A 07212 C	42-47	1460	150	25
JS-A 07213 C	47-54	1460	150	25
JS-A 07214 C	54-63	1460	170	25
JS-A 07215 C	63-75	1460	170	25
Metal-PE laminated (PAL)				
JS-A 07210 P	33-38	1460	140	25
JS-A 07211 P	38-42	1460	140	25
JS-A 07212 P	42-47	1460	150	25
JS-A 07213 P	47-54	1460	150	25
JS-A 07214 P	54-63	1460	170	25
JS-A 07215 P	63-75	1460	170	25
Metal screen lead, corrugated copper				
JS-A 07210 M	33-38	1460	140	25
JS-A 07211 M	38-42	1460	140	25
JS-A 07212 M	42-47	1460	150	30
JS-A 07213 M	47-54	1460	150	30
JS-A 07214 M	54-63	1460	170	30
JS-A 07215 M	63-75	1460	170	30

Designation	XLPE diameter mm	Dimensions L mm	Dimensions Ø mm	Weight kg/kit
Copper wire screen				
JS-A 12310 C	46-51	1460	170	28
JS-A 12311 C	51-57	1460	174	28
JS-A 12312 C	57-63	1460	180	30
JS-A 12313 C	63-72	1460	190	30
JS-A 12314 C	72-84	1460	212	32
JS-A 12315 C	84-100	1460	220	32
Metal-PE laminated (PAL)				
JS-A 12310 P	46-51	1460	176	29
JS-A 12311 P	51-57	1460	180	29
JS-A 12312 P	57-63	1460	195	31
JS-A 12313 P	63-72	1460	198	31
JS-A 12314 P	72-84	1460	218	33
JS-A 12315 P	84-100	1460	226	33

Designation	XLPE diameter mm	Dimensions L mm	Dimensions Ø mm	Weight kg/kit
Metal screen lead, corrugated copper				
JS-A 12310 M	46-51	1460	176	29
JS-A 12311 M	51-57	1460	180	29
JS-A 12312 M	57-63	1460	195	31
JS-A 12313 M	63-72	1460	198	31
JS-A 12314 M	72-84	1460	218	33
JS-A 12315 M	84-100	1460	226	33

We reserve the right to alter the design and range of our products.

Technical specification
JX-A 52-123 kV

All dimensions in mm

Designation	XLPE-diameter mm	Dimensions L mm	Dimensions Ø mm	Net weight kg/kit
Copper wire screen				
JX-A 05210 C	33-38	1800	200-235	55
JX-A 05211 C	38-42	1800	200-235	55
JX-A 05212 C	42-47	1800	200-235	55
JX-A 05213 C	47-54	1800	200-235	55
JX-A 05214 C	54-63	1800	200-235	55
JX-A 05215 C	63-75	1800	200-235	55
Metal-PE laminated (PAL)				
JX-A 05210 P	33-38	1800	200-235	55
JX-A 05211 P	38-42	1800	200-235	55
JX-A 05212 P	42-47	1800	200-235	55
JX-A 05213 P	47-54	1800	200-235	55
JX-A 05214 P	54-63	1800	200-235	55
JX-A 05215 P	63-75	1800	200-235	455
Metal screen lead, corrugated copper				
JX-A 05210 M	33-38	1800	200-235	60
JX-A 05211 M	38-42	1800	200-235	60
JX-A 05212 M	42-47	1800	200-235	60
JX-A 05213 M	47-54	1800	200-235	60
JX-A 05214 M	54-63	1800	200-235	60
JX-A 05215 M	63-75	1800	200-235	60

Designation	XLPE-diameter mm	Dimensions L mm	Dimensions Ø mm	Net weight kg/kit
Copper wire screen				
JX-A 07210 C	33-38	1800	200-235	55
JX-A 07211 C	38-42	1800	200-235	55
JX-A 07212 C	42-47	1800	200-235	55
JX-A 07213 C	47-54	1800	200-235	55
JX-A 07214 C	54-63	1800	200-235	55
JX-A 07215 C	63-75	1800	200-235	55
Metal-PE laminated (PAL)				
JX-A 07210 P	33-38	1800	200-235	55
JX-A 07211 P	38-42	1800	200-235	55
JX-A 07212 P	42-47	1800	200-235	55
JX-A 07213 P	47-54	1800	200-235	55
JX-A 07214 P	54-63	1800	200-235	55
JX-A 07215 P	63-75	1800	200-235	55
Metal screen lead, corrugated copper				
JX-A 07210 M	33-38	1800	200-235	60
JX-A 07211 M	38-42	1800	200-235	60
JX-A 07212 M	42-47	1800	200-235	60
JX-A 07213 M	47-54	1800	200-235	60
JX-A 07214 M	54-63	1800	200-235	60
JX-A 07215 M	63-75	1800	200-235	60

Designation	XLPE diameter mm	Dimensions L mm	Dimensions Ø mm	Weight kg/kit
Copper wire screen				
JX-A 12310 C	46-51	1800	235-300	60
JX-A 12311 C	51-57	1800	235-300	60
JX-A 12312 C	57-63	1800	235-300	60
JX-A 12313 C	63-72	1800	235-300	60
JX-A 12314 C	72-84	1800	235-300	65
JX-A 12315 C	84-100	1800	235-300	65
Metal-PE laminated (PAL)				
JX-A 12310 P	46-51	1800	235-300	60
JX-A 12311 P	51-57	1800	235-300	60
JX-A 12312 P	57-63	1800	235-300	65
JX-A 12313 P	63-72	1800	235-300	65
JX-A 12314 P	72-84	1800	235-300	65
JX-A 12315 P	84-100	1800	235-300	65

Designation	XLPE diameter mm	Dimensions L mm	Dimensions Ø mm	Weight kg/kit
Metal screen lead, corrugated copper				
JX-A 12310 M	46-51	1800	235-300	60
JX-A 12311 M	51-57	1800	235-300	60
JX-A 12312 M	57-63	1800	235-300	65
JX-A 12313 M	63-72	1800	235-300	65
JX-A 12314 M	72-84	1800	235-300	65
JX-A 12315 M	84-100	1800	235-300	65

We reserve the right to alter the design and range of our products.

Equipment for installation of JS and JX

RKM 123
Installation tool for JS and JX cable joints.

RKM 850
Sawing tool to split an installation tube.

Installation kit
The kit consists of an installation cone, extraction sleeve halves and disassembly ring halves.
It is available in seven sizes that must be selected according to the cable oversheath.

Designation	Description	Net weight kg/kit
RKM 123	Installation tool	55.0
RKM 850	Saw to split an installation tube	0.6
Installation kit	Installation kit	5.8

We reserve the right to alter the design and range of our products.

- No special tools
- Minimal cable stripping
- Fits all cable dimensions

Cable joint, taped SMX 52-145 kV

Use:
Suitable for jointing XLPE-insulated cables with Al and Cu conductors and different cable sheath types.

Standards:
Meets the requirements of:
SS, IEC

Design:
The cable joint consists of tapes with different properties, cone oil, copper net, and heat shrink as oversheath. Supplied complete in two versions: with connector for Elpress system alternatively fitted for thermite welding. Moreover there are accessories to reinstate most types of screen, armouring and oversheath.

Welding equipment and accessories must be ordered separately.

The following cable data should be quoted when ordering:
– Voltage
– Conductor cross section
– Conductor material Cu or Al
– Diameter across prepared insulation
– Screen, cross section and type
– Outer diameter of the cable

Type of joint connector:
– Press
– Weld

We reserve the right to alter the design and range of our products.

Technical specification SMX

All dimensions in mm

– Conductor cross section up to 630 mm² to be mounted with Elpress pressystem.
– Conductor cross section up to 1200 mm² to be mounted with welding technique according to Cadweld.

K or A/K ..... – SMX
W If welded type .....
Voltage level .....
Conductor cross section .....
CUW, PAL or Pb .....

K	Copper conductor
A/K	Aluminium and/or copper conductor
W	Weld
CUW	Cable with copper wire screen
PAL	Cable with metal-PE laminate as radial watertightness
Pb	Lead-sheated cable

For crimping system for cables with aluminium conductor contact us.

Designation*	Voltage kV	Type of cable screen	Conductor cross section mm²	Dimensions Length L mm	Dimensions Diameter Ø mm	Type
K-SMX 52.95 – 630 CUW	52	Cu	95-630	1275	65-90	Press
K-SMX 72.95 – 630 CUW	72	Cu	95-630	1275	80-95	Press
K-SMX 84.150 – 630 CUW	84	Cu	150-630	1275	85-100	Press
K-SMX 123.185 – 630 CUW	123	Cu	185-630	1275-1500	105-110	Press
K-SMX 145.240 – 630 CUW	145	Cu	240-630	1500	115-120	Press
A/K-SMX W 52.95 – 1200 CUW	52	Al/Cu	95-1200	1275	65-90	Cadweld
A/K-SMX W 72.95 – 2000 CUW	72	Al/Cu	95-2000	1275	80-115	Cadweld
A/K-SMX W 84.150 – 2000 CUW	84	Al/Cu	150-2000	1275	85-120	Cadweld
A/K-SMX W 123.185 – 2000 CUW	123	Al/Cu	185-2000	1275	100-125	Cadweld
A/K-SMX W 145.240 – 2000 CUW	145	Al/Cu	240-2000	1500	115-130	Cadweld

* The suffix CUW to be replaced with Pb for lead-sheathed cable.
The suffix CUW to be replaced with PAL for metal-PE laminated cable as radial water tightness.

We reserve the right to alter the design and range of our products.

Accessories SMX

All dimensions in mm

ARM

For restoring the armouring when jointing armoured cables.

Design:
The kit consists of plastic mesh, spiral, funnel with holder, transparent tape and cast resin. The mesh and spiral are placed over the joint and sealed with the tape. The cast resin, which contains a base and hardener in a partitioned bag, is mixed and poured into the funnel until the mesh is full. The maximum storage temperature for the casting resin is 30 °C.

Selection guide for ARM
For selecting ARM for unknown applications. Requires the length of joint "L" and diameter over joint "Ø" as below:

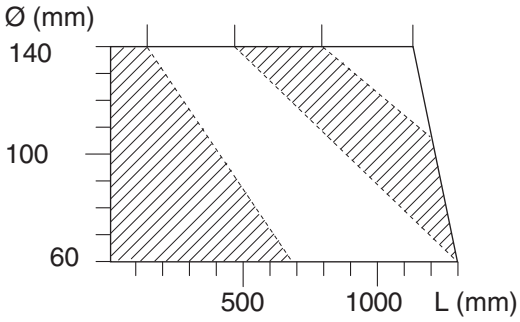

ARM kit size

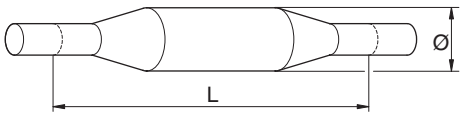

E.g. Ø 115 and L 850 mm give ARM 3.

Other dimensions on request.

SKKB

SKKB is a sheath sectionalizing kit for cables up to 170 kV. It can be mounted with advantage on already laid cable, where the load condition has changed and losses need to be reduced. Also gives the opportunity to optimize the cable system when sheath sectionalizing can be chosen at a free position along the cable.

Designation	Cable Ø	Use
ARM	–	Armouring kit for armoured cable
SKKB 5 PAL	< 50	Metal-PE laminated as radial watertightness
SKKB 10 PAL	50-100	Metal-PE laminated as radial watertightness
SKKB 15 PAL	100-150	Metal-PE laminated as radial watertightness
SKKB 5 MET	< 50	For metallic screen with or without Cu screen wires
SKKB 10 MET	50-100	For metallic screen with or without Cu screen wires
SKKB 15 MET	100-140	For metallic screen with or without Cu screen wires
SKKB 5 CUW	< 50	Cu screen
SKKB 10 CUW	50-100	Cu screen
SKKB 15 CUW	100-150	Cu screen

We reserve the right to alter the design and range of our products.

Cable joint, prefabricated SMPGB, SMPGB-C, SMPGB BOX 145-170 kV

- Prefabricated for safe and easy installation
- Active pressure
- Reliable
- Joint bodies routine-tested according to IEC before delivery
- Screw technology
- Compact joint for minimal cable stripping
- Easy jointing of cables with different sizes

Use:
Suitable for jointing XLPE or EPR insulated cables with Al and Cu conductors and different types of cable sheath.

Standard:
Meets the requirements of:
SS, IEC

Design:
The cable joint consists of a joint tube with two prefabricated adapters and a screw cable clamp. For diameter across the prepared insulation and conductor diameter, see the table below.

Screw technology facilitates jointing of the conductor. A torque wrench, installation cone and installation tools RKM 170 are needed for assemblying.

There are joints for different types of screen, armouring and oversheath:

SMPGB
Standard joint with heat-shrink oversheath.

SMPGB-C
Cable joint with integral screen separation for sheath sectionalizing of cable screens. The same technology as for SMPGB BOX (see following paragraph) is used for the oversheath for this design.

SMPGB BOX
Standard joint with reinforced oversheath when laying in or under water. Two protective halves form a box which is filled with two-component compound for blocking water and to provide mechanical properties.

SMPGB

SMPGB-C Pb

SMPGB Pb BOX

Voltage kV	XLPE-Ø mm min	XLPE-Ø mm max	Conductor Ø mm min/max
145	48	107	16-65
170	61	107	16-65

The following cable data should be quoted when ordering:
– Voltage
– Conductor cross section
– Conductor material Cu or Al
– Diameter across prepared insulation
– Diameter over conductor
– Screen, cross section and type
– Outer diameter of the cable

We reserve the right to alter the design and range of our products.

Technical specification SMPGB 145-170 kV

All dimensions in mm

SMPGB	L	Ø	SMPGB	L	Ø
	mm			mm	
14501-14509 std	1300	205	1701-1704 std	1300	205
14510-14513 std	1950	205	1705-1708 std	1950	205
14501-14509 PAL	1600	210	1701-1704 PAL	1600	210
14510-14513 PAL	2250	210	1705-1708 PAL	2250	210
14501-14509 Pb	1620	245	1701-1704 Pb	1650	245
14510-14513 Pb	2220	245	1705-1708 Pb	2220	245

SMPGB

SMPGB-C	L	B/Ø
	mm	
1701-1704 Pb	1660	410
1705-1708 Pb	1660	410
1701-1704 PAL	1500	400
1701-1704 PAL	2080	400

SMPGB-C Pb

SMPGB BOX	L	B/Ø
	mm	
14501-14505 Pb	1660	410
14506-14513 Pb	1660	410
14501-14513 PAL	1660	410
1701-1704 Pb	1660	410
1705-1708 Pb	1500	410
1701-1704 PAL	1500	400

SMPGB Pb BOX

Designation* SMPGB Standard	Designation* SMPGB-C Cross-bonding	Designation* SMPGB with BOX	Voltage kV	XLPE diameter mm	Installation cone
SMPGB 14501	–	**SMPGB 14501 BOX**	145	48-51	4209.2384
SMPGB 14502	–	**SMPGB 14502 BOX**	145	50-53	4209.2385
SMPGB 14503	–	**SMPGB 14503 BOX**	145	52-56	4209.2386
SMPGB 14504	–	**SMPGB 14504 BOX**	145	55-59	4209.2387
SMPGB 14505	–	**SMPGB 14505 BOX**	145	58-62	4209.2388
SMPGB 14506	–	**SMPGB 14506 BOX**	145	61-65	4209.2331
SMPGB 14507	–	**SMPGB 14507 BOX**	145	63-68	4209.2332
SMPGB 14508	–	**SMPGB 14508 BOX**	145	66-71	4209.2333
SMPGB 14509	–	**SMPGB 14509 BOX**	145	69-76	4209.2334
SMPGB 14510	–	**SMPGB 14510 BOX**	145	74-82	4209.2335
SMPGB 14511	–	**SMPGB 14511 BOX**	145	80-91	4209.2336
SMPGB 14512	–	**SMPGB 14512 BOX**	145	89-100	4209.2337
SMPGB 14513	–	**SMPGB 14513 BOX**	145	98-107	4209.2400
SMPGB 1701	**SMPGB-C 1701**	**SMPGB 1701 BOX**	170	61-65	4209.2331
SMPGB 1702	**SMPGB-C 1702**	**SMPGB 1702 BOX**	170	63-68	4209.2332
SMPGB 1703	**SMPGB-C 1703**	**SMPGB 1703 BOX**	170	66-71	4209.2333
SMPGB 1704	**SMPGB-C 1704**	**SMPGB 1704 BOX**	170	69-76	4209.2334
SMPGB 1705	**SMPGB-C 1705**	**SMPGB 1705 BOX**	170	74-82	4209.2335
SMPGB 1706	**SMPGB-C 1706**	**SMPGB 1706 BOX**	170	80-91	4209.2336
SMPGB 1707	**SMPGB-C 1707**	**SMPGB 1707 BOX**	170	89-100	4209.2337
SMPGB 1708	**SMPGB-C 1708**	**SMPGB 1708 BOX**	170	98-107	4209.2400

* For lead-sheathed cable add Pb at the end of the type designation. For metal-PE laminated cable with radial waterproofing, add PAL (e.g. SMPGB 1701 Pb, SMPGB 1701 PAL).
For SMPGB with BOX; add Pb or PAL before BOX.

For installation tool see next page.

We reserve the right to alter the design and range of our products.

Tool and accessories SMPGB 145-170 kV

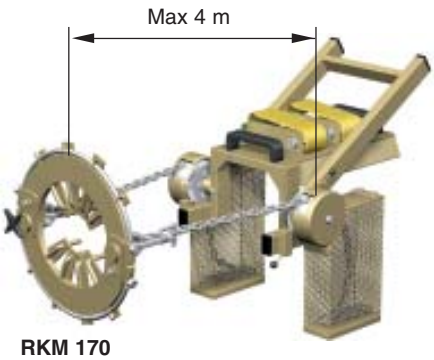

RKM 170
Installation tool for
SMPGB joint 145-170 kV.

Installation cone
For installing adapter.

Designation	Description	Weight kg/kit
RKM 170	Installation cone for SMPGB 145-170 kV	42
Installation cone	Installation cone	

We reserve the right to alter the design and range of our products.

Cable joint, prefabricated SMPGB 362-420 kV

- Prefabricated for safe and easy installation
- Active pressure
- Reliable
- Joint bodies routine-tested according to IEC before delivery
- Screw technology
- Compact joint for minimal cable stripping
- Easy jointing of cables with different sizes

Use:
For jointing XLPE- or EPR-insulated cables with aluminium and copper conductors and different types of cable sheath.

Standard:
Meets the requirements of:
SS, IEC, IEEE

Design:
The cable joint consists of a jointing tube with two prefabricated adapters made of rubber, a screw cable clamp and a heat-shrink oversheath.

See table below for diameter across the prepared insulation.

The use of screws makes conductor jointing easier. A torque wrench, assembly cone and assembly tool RKM 362 are needed for assembly.

The joints are used for various types of screen, armouring and oversheath.

For SMPGB 420 kV contact us!

The following cable data should be quoted when ordering:
– Voltage
– Conductor cross section
– Conductor material Cu or Al
– Diameter across prepared insulation
– Diameter over conductor
– Screen, cross section and type
– Outer diameter of the cable

Designation*	Voltage kV	XLPE diameter mm	Installation cone
SMPGB 3622	362	80-88	4209.2378
SMPGB 3623	362	86-95	4209.2379
SMPGB 3624	362	93-103	4209.2380
SMPGB 3625	362	101-111	4209.2381
SMPGB 3626	362	109-120	4209.2382

* For lead sheathed cable add Pb at the end of type designation and for poly metal-PE laminated cable add PAL (e.g. SMPGB 3622 Pb, SMPGB 3622 PAL).

We reserve the right to alter the design and range of our products.

Technical specification, tools and accessories SMPGB 362-420

All dimensions in mm

SMPGB

SMPGB	L	Ø
	mm	
362x PAL	2000	350
362x Pb	2100	375

Installation cone
For installing adapter.

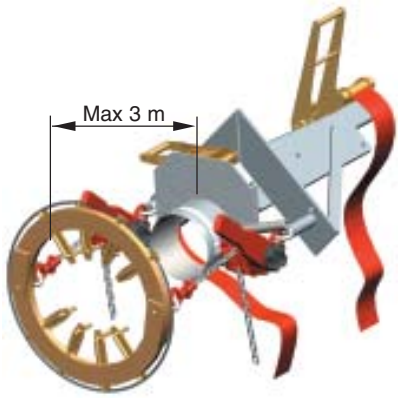

RKM 362
Installation tool for SMPGB joint 362 kV.

To be ordered separately:

Designation	Description	Net weight kg/kit
RKM 362	Installation tool for SMPGB 362 kV	74
Installation cone	Installation cone	

We reserve the right to alter the design and range of our products.

Earthing kits for cable terminations

The earthing kit connects the screen of the cable at a termination. The earthing kit is designed to take care of the total screen cross section. It also provides the cable with a sealing.

Note that the earthing kit increases the cable outer diameter by 20 mm!

For corrugated screen made of:
- *Aluminium use JSA 1 Al*
- *Copper use JSA 1 Pb*
- *Stainless steel; contact us*

Cable with copper wire screen only.

No earthing kit is needed.

Cable with copper wire screen and metal-PE laminate.

Use earthing kit SCK 2.

Metal-sheathed cable with or without screen wires.

Use earthing kit JSA 1 Pb.

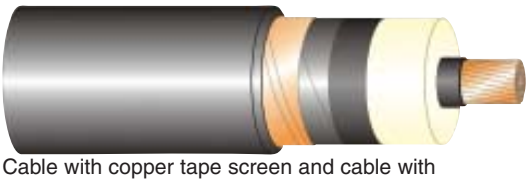

Cable with copper tape screen and cable with armouring.

Contact us.

Designation	Diameter over oversheath mm	No of plates	Total Cu equivalent cross section in earthing kit mm²	No of Cu braids	For cables with
JSA 1 Al	–	–	130	6	Corrugated aluminium
JSA 1 Pb	40-120*	–	130	6	Lead sheathed or corrugated copper
JSA 1 Pb 10	120-150*	–	220	10	Lead sheathed or corrugated copper
JSA 1 Pb 15	150-200*	–	330	15	Lead sheathed or corrugated copper
SCK 2-1	13-26	1	–	–	Metal-PE laminated as radial watertightness
SCK 2-2	26-46	2	–	–	Metal-PE laminated as radial watertightness
SCK 2-3	46-66	3	–	–	Metal-PE laminated as radial watertightness
SCK 2-4	66-86	4	–	–	Metal-PE laminated as radial watertightness
SCK 2-5	86-106	5	–	–	Metal-PE laminated as radial watertightness
SCK 2-6	106-126	6	–	–	Metal-PE laminated as radial watertightness
SCK 2-7	126-145	7	–	–	Metal-PE laminated as radial watertightness

* Applicable for metalic sheath ≤ 4 mm. For thicker metallic sheath contact us.

We reserve the right to alter the design and range of our products.

Tools and oil

All dimensions in mm

RKM 670
Cable knife, 30 mm blade.

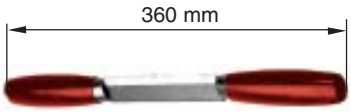

RKM 672
Sheath removing knife, with two handles, for XLPE cable.

AV 6220
Sheath removing tool for PE-sheathed cable Ø > 20 mm.

730R
Torque wrench for screw connectors, screw cable lugs, overhead line clamps, etc. Supplied with 7 mm socket head, extension arm and 8 mm internal hexagon head.
Torque range 6-50 Nm.

RKM 130
Torque wrench for screw connectors, screw cable lugs, overhead line clamps, etc. Torque wrench can be used with standard 1/2" sockets.
Torque range 25-130 Nm.

RKM-FV
Vessel heater. Fits RKM-PM and 60-litre drum.

RKM-PM
Oil filling equipment (30 litres).

IG 180X
Syntetic insulating oil.

Designation	Description	Designation	Description
RKM 670	Cable knife	**RKM 130**	Torque wrench 25-130 Nm
RKM 672	Sheath removing knife	**RKM-PM**	Manual oil filling equipment
AV 6220	Sheath removing tool	**RKM-FV**	Vessel heater
730 R	Torque wrench 6-50 Nm		

Designation	Description	Contents litre	Vessel
IG 1801	Syntetic insulating oil	4	Tin
IG 1803	Syntetic insulating oil	2	Tin
IG 1804	Syntetic insulating oil	5	Tin
IG 1805	Syntetic insulating oil	60	Drum
IG 1807	Syntetic insulating oil	190	Drum

We reserve the right to alter the design and range of our products.

Tools

All dimensions in mm

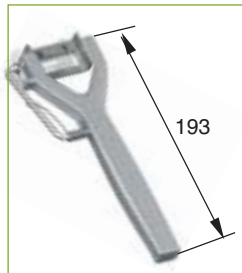

5VW1002
Spare blade for XLPE shaver (5VW 1001).

5VW1001
XLPE shaver, for removing outer conductive layer.

MB 1
Cable sheath breaker.

SV140/SV190
Installation tool for stress cone.

RKM 4595 F
Spare blade for RKM 4595.
For tapering XLPE-insulation.

RKM 4595
Tool for removing and tapering XLPE-insulation and for removing outer conductive layer.

RKM 4595 R
Spare blade for RKM 4595.
For removing XLPE-insulation and conductive layer.

SH 50, SH 80, SH 130
Tool for removing and tapering XLPE-insulation and for removing outer conductive layer.

Designation	Description	Diameter across XLPE-insulation Ø mm
5VW1001	XLPE shaver	
5VW1002	Spare blade	
RKM 4595	Tool for removing and tapering	45-95
RKM 4595 F	Spare blade for tapering the insulation	
RKM 4595 R	Spare blade for removing the insulation	
MB 1	Outer sheath breaker (pack of two)	
SH 50	XLPE-shaver	15-50
SH 80	XLPE-shaver	40-80
SH 130	XLPE-shaver	70-130
SV 140	Installation tool for stress cone, SKG	
SV 190	Installation tool for stress cone, SKGB	

We reserve the right to alter the design and range of our products.

- Non-magnetic
- Withstands high short-circuits

Universal clamps UKR 90, UKRA 90

All dimensions in mm

UKR 90

Use:
For fixing cables, tubes, hoses, etc. It does fix round profiles with diameters of 20-90 mm or angular profiles with circumferences of 60-300 mm.

Design:
The bracket is made of hot-dip galvanized steel. The band is stainless steel SS 2333-02 with rounded edges and has a thickness of 0.2 mm. The band can be tightened and locked in one operation. The locking bolt is made of die-cast zinc alloy.

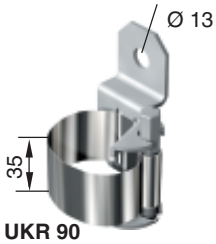

UKR 90
Universal clamp.

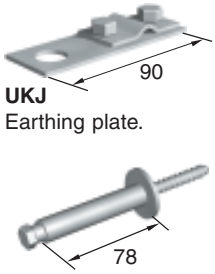

UKJ
Earthing plate.

UKS 90
Spacer.

UKRS 90
Universal clamp with spacer.

Typical applications:

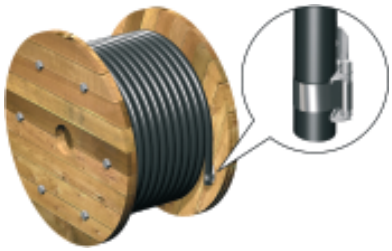

UKRA 90

Use:
For fixing cables with diameters of 20-90 mm to the anchor bars in a cable distribution cabinet, etc.

Design:
The bracket is made of hot-dip galvanized steel. The band is stainless steel SS 2333-02 with rounded edges and has a thickness of 0.2 mm. The band can be tightened and locked in one operation. The locking bolt is made of die-cast zinc alloy.

A spring-loaded shaped nut with a reversible locking washer offers a choice of fixed or flexible position and direction.

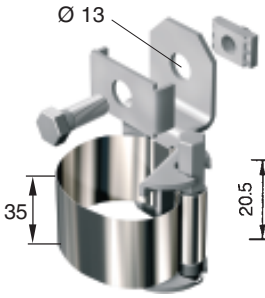

UKRA 90
Universal clamp with bracket for anchor bar

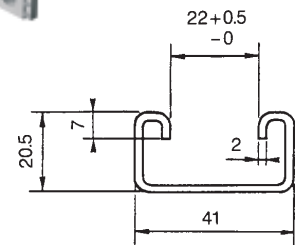

Dimensional drawings of the anchor bar.

Designation	Weight kg/item
UKR 90	0.17
UKRA 90	0.23
UKS	0.28
UKRS 90	0.45
UKJ	0.14

We reserve the right to alter the design and range of our products.

- Non-magnetic
- Withstands high short circuits

Universal clamps UKR 200, UKRA 200

All dimensions in mm

UKR 200

Application:
For bundling cables with diameters of 50-275 mm.

Design:
The bracket is made of hot-dip galvanized steel. The band is stainless steel SS 2333-02 with rounded edges and has a thickness of 0.2 mm. The band can be tightened and locked in one operation. The locking bolt is made of die-cast zinc alloy.

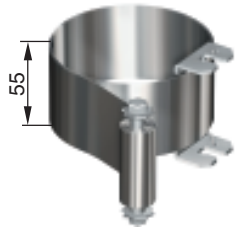

UKR 200
Universal clamp.

UKRF

Application:
For fixing cables, etc., to cable ladders. For use together with UKR 200. The height of the ladder profile is approx.16 mm and will fit within the specified dimensions.

Design:
The bracket is made from hot-dip galvanized steel.

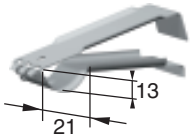

UKRF
Fixing bracket.

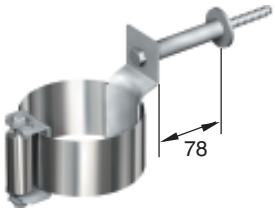

UKRS 200
Universal clamp UKR 200 with spacer.

UKRA 200

Application:
For fixing cables with diameters of 50-275 mm to the anchor bars.

Design:
The bracket is made of hot-dip galvanized steel. The band is stainless steel SS 2333-02 with rounded edges and a thickness of 0.2 mm. The locking bolt is made of die-cast zinc alloy and can be tightened and locked in one operation.

A spring-loaded shaped nut with a reversible locking washer offers a choice of fixed or flexible position and direction.

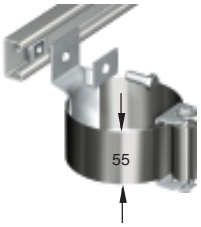

UKRA 200
Universal clamp with bracket for anchor bar.

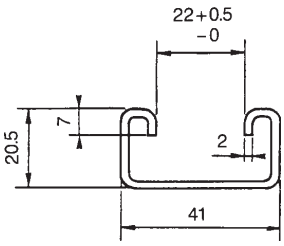

Dimensional drawing of the anchor bar.

Designation	Weight kg/item
UKR 200	0.32
UKRA 200	0.45
UKRF	0.21
UKRS 200	0.81

We reserve the right to alter the design and range of our products.

Typical applications UKR 200,UKRA 200

All dimensions in mm

Flat configuration

(Results of testing with 2 turns of steel band).

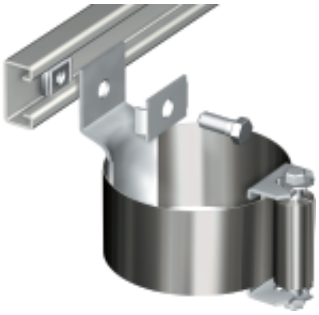

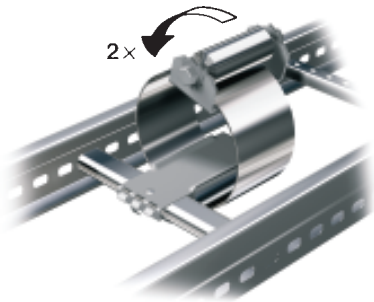

UKR 200 with fixing brackets UKRF.

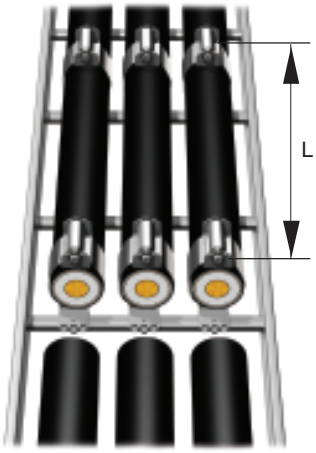

UKR 200 with one fixing bracket, UKRF.

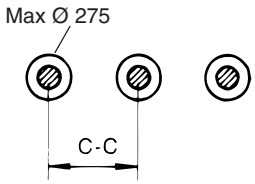

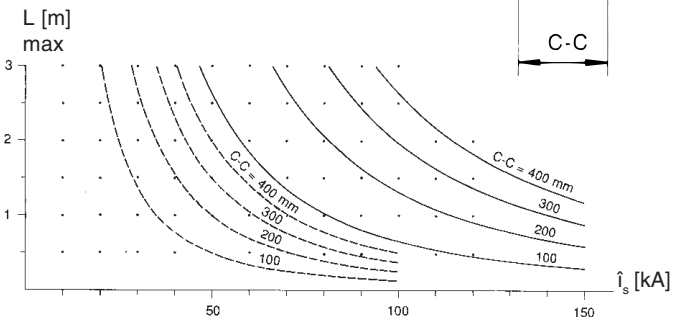

$\hat{I}_s$ = Short circuit current (peak value)
C-C = Distance between cable centres
L max = Distance between clamps
——— UKR 200 with fixing bracket, UKRF
— — — UKRA 200

Trefoil configuration

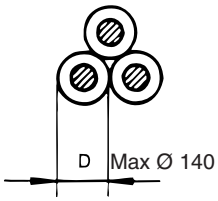

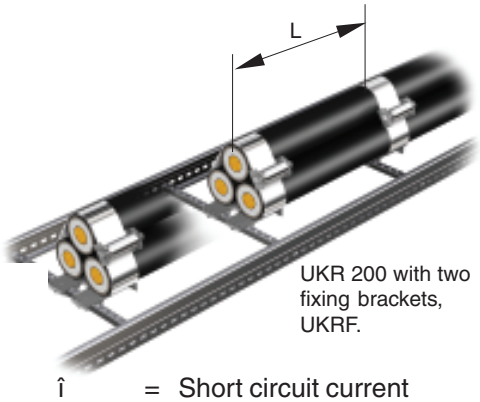

UKR 200 with two fixing brackets, UKRF.

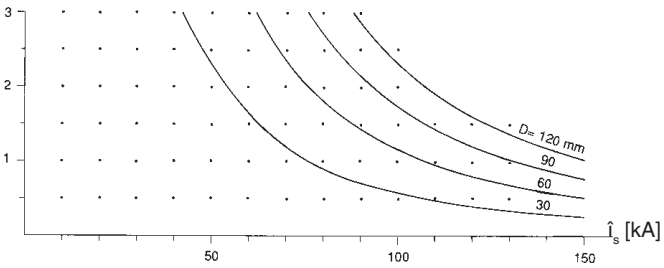

$\hat{I}$ = Short circuit current (peak value)
D = Outer diameter of cable
L max = Distance between clamps
——— UKR 200 with fixing bracket, UKRF

We reserve the right to alter the design and range of our products.

List of contents in alphabetical order

Designation	Page No.
A	
A-TBF 30 SKR	101
A-TBF 40 SKR	101
ADAPTER 1	57
ADAPTER 2	57
ADAPTER 3	57
ADAPTER 4	57
ADAPTER 5	57
ADAPTER 6	57
A/K SMX	111
AK 250	45, 64
AK-ADAS 5025-7	31
AK-ADAS 7035-7	31
AK-ADAS 9550-7	31
AK-ADAS 12070-7	31
AK-ADAS 15070-7	31
AK-ADAS 185120-5	31
AK-ADAS 240120-7	31
AK-ASA 3535-9	75
AK-ASA 5035-9	75
AK-ASA 7035-9	75
AK-ASA 95150-9	75
AK-ASA 120150-9	75
AK-ASA 150150-9	75
AK-ASA 185150-9	75
AK-ASA 240150-9	75
APECB 84-420	96
APECB-P 84-300	96
APED 12-84 kV	93
APED-P 72 kV	93
APEGA 84-420 GIS	102
APEGA TRF 84-420	105
APIT 12-36	41
APSEA 52-72	99
APSTA 12-36	42
ARM	71, 113
AV 6220	90, 120

Designation	Page No.
C	
CST 245-420	106
CU 250	45
CW 3013	72
CW 3817	72
D	
DMT1	104
F	
5VW1001/1002	121
FBS-1722 1	90
FK 120	72
FK 300	72
FKFB	72
FP 1530	82
FP 1535	82
FP 1540	82
FP 1545	82
FP 1550	82
FP 1555	82
FP 1560	82
FP 1565	82
FP 1570	82
FP 1575	82
FP 1580	82
FP 1585	82
FPA 1021	82
FPA 1024	82
FPA 1027	82
FPA 1030	82
FPA 1033	82
FPA 1036	82
FPA 1039	82
FPA 1042	82

We reserve the right to alter the design and range of our products.

List of contents in alphabetical order

Designation	Page No.
F	
FPA 1045	82
FPA 1048	82
FPA 1051	82
FPA 1054	82
FPA 1057	82
FPA 1060	82
FPA 1063	82
FPA 1065	82
FPMP 1523	82
FPMP 1526	82
FPMP 1529	82
FPMP 1532	82
FPMP 1535	82
FPMP 1538	82
FPMP 1540	82
G	
GAP APEC	98
GAP APED	95
GB-M20	90
GC	83
GEX 01	75
GEX 02	75
H	
HDC 250	63
HDC 630-1	65
HDC 630-2	65
HU 150	85
HU 200	85
HUF	85
HUS	85
I	
IA 1003	83
IA 1701	88
IA 1706	88
IA 1710	88
IA 2112	83
IA 2113	83
IA 2333	86

Designation	Page No.
I	
IA 2337	86
IA 2338	86
IA 2339	86
IA 2342	86
IA 2343	86
IA 2352	86
IA 2362	86
IA 2421	86
IA 2441	86
IA 2443	86
IA 2444	86
IA 2502	83
IA 2508	83
IA 2518	83
IA 2519	83
IG 1201	84
IG 1601	84
IG 1604	84
IG 1717	84
IG 1718	84
IG 1801-1807	120
IH SOC 250	45, 64
IH SOC 400	47
IH SOC 630	49, 66
IK 1002	84
IK 1003	84
IK 1105	87
IK 1108	87
IK 1401	87
IK 1405	87
IK 1407	87
IK 1502	87
IK 2221	87
IK 2230	88
IK 2233	87
IKP	83
Installation cone	116, 118
Installation kit for JS	110
IP 250	45, 64
IP 400	47
IP 630	49, 66
IS 16	28, 29
IS 50	28, 29
IS 95	28, 29

We reserve the right to alter the design and range of our products.

List of contents in alphabetical order

Designation	Page No.
J	
JP 250	45
JP-250-HDC	64
JP 400	47
JP 630	49
JP 630-HDC	66
JPA 630-HDC	66
JPA V	66
JS 52-123	107
JSA 1 Al	119
JSA 1 Pb	119
JSA 1 Al 10	119
JSA 1 Pb 15	119
JSA 4-6	69
JSA 10-16	70
JX 52-123	107
JXT 1-3	69
K	
KA 250	64
KA 630	66
K-TBF 30 SKR	101
K-TBF 40 SKR	101
KAL 11	30
KAL 12	30
KAP 300 U	52
KAP 630-11	50
KAP 630-12	50
KAP 630-22	50
KAP 630-P11	50
KAP 630-P12	50
KAP 630-P22	50
KAP 630-S12	50
KAP 630-S24	50
K-ASA 185150-9	75
K-ASA 240150-9	75
K-ASB 7035-9	75
K-ASB 150150-9	74
K-SMX 52-145	111

Designation	Page No.
L	
LBR 250	45
LPH 2530/4052/6070/70	28
LXAC 116/135	29
M	
MA 250	45, 64
MA 630	49, 66
MB 1	121
MBR 250	88
Model 1700 Series	90
O	
OKT	98, 104
OTIA 152	74
P	
PC 630	49, 66
PC 630/250	49, 66
PG 630	49
PIU-APEC	98
PIU-APED	95
PPC 11	24
PPC 12	24
PPC 13	24
PPC 14	24
Pressure ring	103, 106
PSSK 1	67
PSSK 1 E	67
PSSK 2	67
PSSK 2 E	67
PSST 150	67
PSST 300	67
PXS 02	77
PXS 03	77
PXSA 12	77
PXSA 12 A	77
PXSA 12 W	77
PXSA 22	77
PXSA 22 W	77
PXSA 23	77

We reserve the right to alter the design and range of our products.

List of contents in alphabetical order

Designation	Page No.
R	
RE-APED	95
RE-APEGA	104
RKM 1055	89
RKM 123	110
RKM 130	120
RKM 170	116
RKM 362	118
RKM 402	83
RKM 4595	121
RKM 4595 F	121
RKM 4595 R	121
RKM 670	89, 120
RKM 672	89, 120
RKM 850	110
RKM-FV	120
RKM-PM	120
RKS 1607 054	89
RULLE 1	86
RULLE 2	86
S	
730 R	89, 120
SAGA 11 Y	25
SAGA 11 Y B	25
SCK 2	119
SH 50, SH 80, SH 130	121
SH-SKRM 70	73
SH-SKRM 150	73
SH-SKRM 240	73
SH-SKRM 400	73
SH-SKRM 630	73
SKALUS	88
SKKB	113
SKSA 95-13	73
SKSA 300-13	73
SKSB 70-12	73
SKSB 150-12	73
SKSB 240-12	73
SKSB 400-16	73
SKSB 630-16	73

Designation	Page No.
S	
SMARTA 10-5 B	24
SMARTA 11-5 B	24
SMARTA 12 B	24
SMARTA 13 B	24
SMARTA 14 B	24
SMILA 11	27
SMILA 12	27
SMKC 11-5	26
SMKC 12	26
SMKC 13	26
SMKC 14	26
SMPGB 145-170	114
SMPGB 362-420	117
SMPGB BOX 145-170	114
SMPGB-C 145-170	114
SMTA 24362	80
SMTD 152 K	76
SMTD 152 LK	76
SMTD 152 RK	76
SMTD 153 K	76
SMTPA 24523	80
SMTXB 1502	78
SMTXB 1502 L	78
SMTXB 1503	78
SMTXB 1522	78
SMTXB 1522 L	78
SMTXB 1522 W	78
SMTXB 1532	78
SMTXB 1532 L	78
SMTXB 1532 W	78
SMTXB 1533	78
SMTXD 3613	79
SMTXD 3623	79
SMTXD 3633	79
SMULA 11	27
SMULA 12	27
SMXB 1-3	60
SMXB 2-3	60
SMXB 3-3	60
SMXB 4-3	60

We reserve the right to alter the design and range of our products.

List of contents in alphabetical order

Designation	Page No.
S	
SMXB 5-3	60
SMXB 7-3	60
SMXB 8-3	60
SMXB 9-3	60
SMXB 1-1	60
SMXB 2-1	60
SMXB 3-1	60
SMXB 4-1	60
SMXB 5-1	60
SMXB 6-1	60
SMXB 7-1	60
SMXB 8-1	60
SMXB 9-1	60
SMXB 10-1	60
SMXB 11-1	60
SMXB 12-1	60
SMXB 13-1	60
SOC 250	44
SOC 250 ST	44
SOC 250 STP	44
SOC 250 TP	44, 66
SOC 400-1	46
SOC 400-1 TP	46
SOC 400-2	46
SOC 400-2 TP	46
SOC 630-1	48, 66
SOC 630-1 TP	48
SOC 630-2	48, 66
SOC 630-2 TP	48
SOJ 121-1 CS	54
SOJ 122-1 CS	54
SOJ 123-1 CS	54
SOJ 124-1 CS	54
SOJ 125-1 CS	54
SOJ 121-3 CS	54
SOJ 122-3 CS	54
SOJ 123-3 CS	54
SOJ 124-3 CS	54
SOJ 241-1 CS	54
SOJ 242-1 CS	54
SOJ 243-1 CS	54

Designation	Page No.
S	
SOJ 244-1 CS	54
SOJ 241-3 CS	54
SOJ 242-3 CS	54
SOJ 243-3 CS	54
SOJ 121-1 70 CSS	54
SOJ 122-1 150 CSS	54
SOJ 123-1 240 CSS	54
SOJ 124-1 400 CSS	54
SOJ 125-1 630 CSS	54
SOJ 121-3 70 CSS	54
SOJ 122-3 150 CSS	54
SOJ 123-3 240 CSS	54
SOJ 241-1 70 CSS	54
SOJ 242-1 150 CSS	54
SOJ 243-1 240 CSS	54
SOJ 243-1 300 CSS	54
SOJ 244-1 400 CSS	54
SOJ 244-1 630 CSS	54
SOJ 241-3 70 CSS	54
SOJ 242-3 150 CSS	54
SOJ 243-3 240 CSS	54
SOJ 121-1 50 CSWS	55
SOJ 122-1 95150 CSWS	55
SOJ 123-1 240 CSWS	55
SOJ 124-1 400 CSWS	55
SOJ 125-1 630 CSWS	55
SOJ 241-1 50 CSWS	55
SOJ 242-1 95150 CSWS	55
SOJ 243-1 240 CSWS	55
SOJ 244-1 400 CSWS	55
SOJ 244-1 630 CSWS	55
SOJ 121-1 R	56
SOJ 122-1 R	56
SOJ 123-1 R	56
SOJ 124-1 R	56
SOJ 125-1 R	56
SOJ 121-3 R	56
SOJ 122-3 R	56
SOJ 123-3 R	56
SOJ 124-3 R	56
SOJ 241-1 R	56

We reserve the right to alter the design and range of our products.

List of contents in alphabetical order

Designation	Page No.
S	
SOJ 242-1 R	56
SOJ 243-1 R	56
SOJ 244-1 R	56
SOJ 241-3 R	56
SOJ 242-3 R	56
SOJ 243-3 R	56
SOJ 121-31 RWI	55
SOJ 122-31 RWI	55
SOJ 123-31 RWI	55
SOJ 241-31 RWI	55
SOJ 242-31 RWI	55
SOJ 243-31 RWI	55
SOJ 121-31 RWIT	55
SOJ 122-31 RWIT	55
SOJ 123-31 RWIT	55
SOJ 241-31 RWIT	55
SOJ 242-31 RWIT	55
SOJ 243-31 RWIT	55
SOJ 121-1 SL	56
SOJ 122-1 SL	56
SOJ 123-1 SL	56
SOJ 124-1 SL	56
SOJ 125-1 SL	56
SOJ 121-3 SL	56
SOJ 122-3 SL	56
SOJ 123-3 SL	56
SOJ 124-3 SL	56
SOJ 241-1 SL	56
SOJ 242-1 SL	56
SOJ 243-1 SL	56
SOJ 244-1 SL	56
SOJ 241-3 SL	56
SOJ 242-3 SL	56
SOJ 243-3 SL	56
SOT 101-3	37
SOT 102-3	37
SOT 103-3	37
SOT 241A-3	38
SOT 241-3	38
SOT 242-3	38
SOT 242B-3	38

Designation	Page No.
S	
SOT 243A-3	38
SOT 243-3	38
SOT 244-3	38
SOT 245-3	38
SOT 243-31	38
SOT 244-31	38
SOT 245-31	38
SOT 246-31	38
SOT 361-31	38
SOT 362-31	38
SOT 241A S1	39
SOT 241 S1	39
SOT 241 S2	39
SOT 241 S3	39
SOT 242 S2	39
SOT 242 S3	39
SOT 242 S4	39
SOT 242B S5	39
SOT 243 A-3 S1	39
SOT 241-3 S1	39
SOT 241-3 S2	39
SOT 241-3 S3	39
SOT 242-3 S2	39
SOT 242-3 S3	39
SOT 242-3 S4	39
SOT 242B-3 S5	39
SOT 243 A S1	39
SOT 243 S1	39
SOT 243 S2	39
SOT 244 S2	39
SOT 244 S3	39
SOT 244 S4	39
SOT 245 S4	39
SOT 245 S5	39
SOT 246 S5	39
SOT 243-3 A S1	39
SOT 243-3 S1	39
SOT 243-3 S2	39
SOT 244-3 S2	39
SOT 244-3 S3	39
SOT 244-3 S4	39

We reserve the right to alter the design and range of our products.

List of contents in alphabetical order

Designation	Page No.
S	
SOT 245-3 S5	39
SOT 243-31 A S1	39
SOT 243-31 S1	39
SOT 243-31 S2	39
SOT 244-31 S2	39
SOT 244-31 S3	39
SOT 244-31 S4	39
SOT 245-31 S4	39
SOT 245-31 S5	39
SOT 246-31 S5	39
SOT 361 S2	39
SOT 361 S3	39
SOT 361 S4	39
SOT 362 S4	39
SOT 362 S5	39
SOT 361-31 S2	39
SOT 361-31 S3	39
SOT 361-31 S4	39
SOT 362-31 S4	39
SOT 362-31 S5	39
SPT1	104
SPV1	104
SSH	68
STOP 1	57, 62
STOP 2	57, 62
SV 140/190	121

Designation	Page No.
T	
TH, THS, THSA	43, 101
TS 121	57
TS 242	57
TS 243	57
TSH	68
U	
UKJ	123
UKR 90	123
UKR 200	124
UKRA 90	123
UKRA 200	124
UKRF	124
UKS	123
UKRS 90	123
UKRS 200	124
W	
WIM 1	62
WIM 2	62
WIM 3	58, 62
WIM 4	58, 62

We reserve the right to alter the design and range of our products.

List of contents by category : Cable terminations and Cable connectors

			See page
Cable Terminations	1 kV	Outdoor, LPH	28
		Outdoor, LXAC	29
	12-36 kV XLPE-insulated cable	Prefabricated indoor/outdoor, SOT 10 kV	37
		Prefabricated indoor/outdoor, SOT 12-36 kV	38
		Prefabricated indoor APIT 12-36 kV	41
		Prefabricated outdoor APSTA 12-36 kV	42
	12-36 kV paper-insulated cable	Indoor, OTIA 12 kV	74
	52-420 kV XLPE-insulated cable	Porcelain insulator, APED 36-84 kV	93
		Composite insulator, APED-P 72 kV	93
		Porcelain insulator, APECB 84-420 kV	96
		Composite insulator, APECB-P 84-300 kV	96
		Versatile, made of rubber, APSEA 52-72 kV	99
		GIS, APEGA 84-420 kV	102
		TRF, APEGA 84-420 kV	105
Cable Connectors	1 kV	Enclosed connection protection, KAL	30
		Prefabricated cable connection for extension of Al cable, AK-ADAS	31
	12-24 kV	Prefabricated screened separable, 250-630 A, SOC	44-49
		Insulated, 630 A indoor, KAP	50-53
		Kabeldon cable cabinet 250 A, HDC 250	63
		Kabeldon cable cabinet 630 A, HDC 630	65

We reserve the right to alter the design and range of our products.

List of contents by category: Cable joints

			See page
Cable Joints	1 kV	Cast resin for plastic-, paper-insulated and signal cable, SMARTA, SMARTA-B	24
		Branch joint for plastic-insulated cable, SAGA Y, SAGA Y B	25
		Heat shrink for plastic-insulated cable, SMKC	26
		Tape for plastic-insulated cable with screen, SMILA	27
		Tape for plastic-insulated cable without screen, SMULA	27
	12-36 kV XLPE-insulated cable	Prefabricated, SOJ 12-24	54-59
		Tape, SMXB 12-36	60
	12-36 kV Paper-insulated cable	Joint, SMTD 12 kV	76
		Repair joint, SMTD-RK 12 kV	76
		Transition joint, SMTXB 12 kV	78
		Transition joint, SMTXD 24-36 kV	79
		Joint, SMTA 24-36 kV	80
		Joint, separated lead-sheathed cable, SMTPA 52 kV	80
	52-362 kV XLPE-insulated cable	Prefabricated, straight JS 52-123 kV	107
		Prefabricated, sheath sectionalized JX 52-123 kV	107
		Tape, SMX 52-145 kV	111
		Prefabricated, SMPGB, SMPGB-C and SMPGB BOX 145-170 kV	114
		Prefabricated SMPGB 362 kV	117

We reserve the right to alter the design and range of our products.

List of contents by category: Accessories for cable accessories

		See page
Accessories	**Accessories for XLPE-insulated Cable accessories 12-36 kV**	
	Screen separation kit, PSSK, PSSK-E, PSST	67
	Branch seal for 3-core cable terminations	68
	Earthing kit for terminations, JSA 4-6 and JXT 1-3	69
	Screen connection for joints, JSA 10-16	70
	Armouring kit, ARM	71
	Overhead line clamp, FK 120 och FK 300	72
	Screw cable lug, SKSA, SKSB	73
	Screw connector, SH-SKRM	73
	Accessories for paper-insulated cable accessories 12-36 kV	
	Spring-loaded gaskets, FPA, FP och FPMP	82
	General accessories	83
	General accessories 12-36 kV	
	Bird protection	85
	Tapes	86
	Other accessories	87
	Tools	89
	Accessories for cable accessories 52-362 kV	
	Earthing kits for cable terminations	119
	Tools and oil	120
	Universal clamps	
	UKR 90	123
	UKRA 90	123
	UKR 200	124
	UKRA 200	124

We reserve the right to alter the design and range of our products.

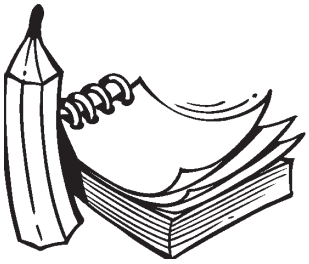

We reserve the right to alter the design and range of our products.

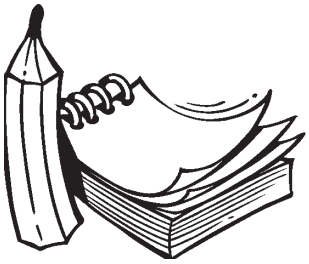

We reserve the right to alter the design and range of our products.

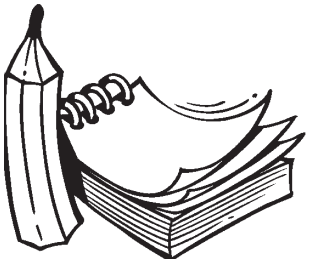

We reserve the right to alter the design and range of our products.

ABB AB
Kabeldon
Box 531
SE-441 15 Alingsås, Sweden
Tel: +46 322 770 00
Fax:+46 322 770 01
www.abb.se/kabeldon

®Copyright 2007 ABB. All rights reserved.